CITY OF KNOXVILLE	YEAR	SHEET NO.
	2012	1
KNOX COUNTY	FUNCTIONAL PLANS WASHINGTON PIKE	
FED. AID PROJ. NO.	STP-M-9109 (69)	
STATE PROJ. NO.	47953-1516-54	

DEPARTMENT OF ENGINEERING AND PUBLIC WORKS
KNOXVILLE, TENNESSEE

WASHINGTON PIKE ROADWAY PROJECT

FUNCTIONAL

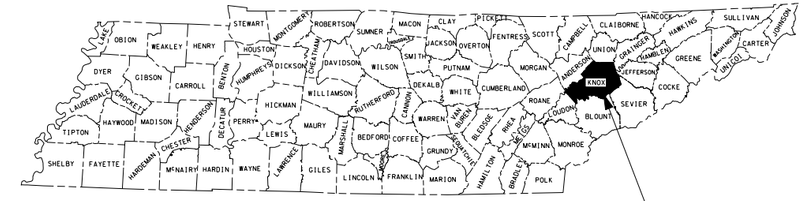

PROJECT LOCATION

PRELIMINARY PLANS

NO EXCLUSIONS
NO EQUATIONS

SPECIAL NOTES

PROPOSALS MAY BE REJECTED BY OWNER IF ANY OF THE UNIT PRICES CONTAINED THEREIN ARE OBVIOUSLY UNBALANCED, EITHER EXCESSIVE OR BELOW THE REASONABLE COST ANALYSIS VALUE.

THIS PROJECT TO BE CONSTRUCTED UNDER THE STANDARD SPECIFICATIONS OF THE TENNESSEE DEPARTMENT OF TRANSPORTATION DATED MARCH 1, 2006 AND ADDITIONAL SPECIFICATIONS AND SPECIAL PROVISIONS CONTAINED IN THE PLANS AND IN THE PROPOSAL CONTRACT.

DESIGNER BOB HALL CHECKED BY JEFF MIZE, P.E.

P.E. NO.

PIN NO. 043090.00

Not To Scale

APPROVED:

MAYOR

DATE:

DESIGNED BY:
CDM Smith
1100 MARION STREET
SUITE 200
KNOXVILLE, TN. 37921
(865) 963-4300

CDM Smith

9/6/2012 10:51:40 AM m:\knoxville\washington_pk_sec2\environmental\functionalplans\Func_01_Title.dgn
i:\cadd\microstation\plot\pentables\generic.tbl

TYPE	YEAR	PROJECT	SHEET NO.
FUNC.	2012	WASHINGTON PIKE	2

FEDERAL PROJECT NO. STP-M-9109 (69)
STATE PROJECT NO. 47953-1516-54
PIN NO. 043090.00

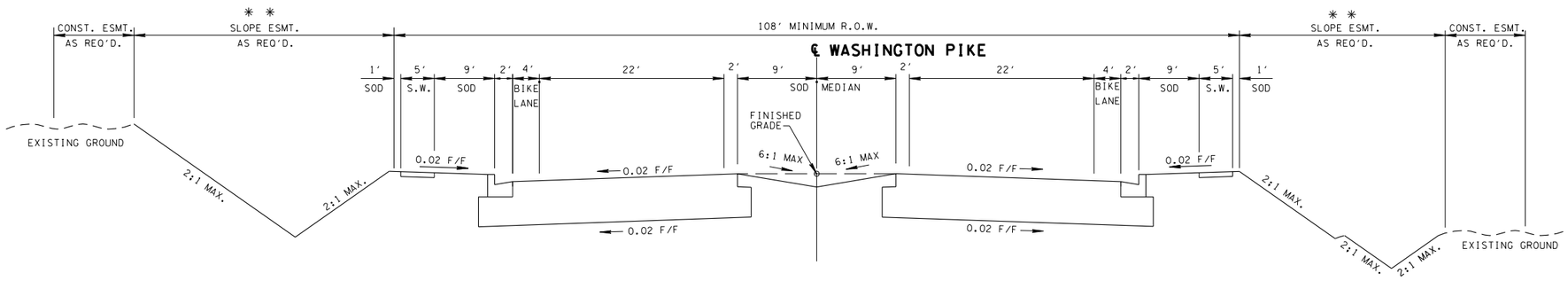

TANGENT SECTION

(BASED ON STD. DWG. RD01-TS-6 & RD01-TS-3C)

✳ ✳ INFILTRATION BASIN

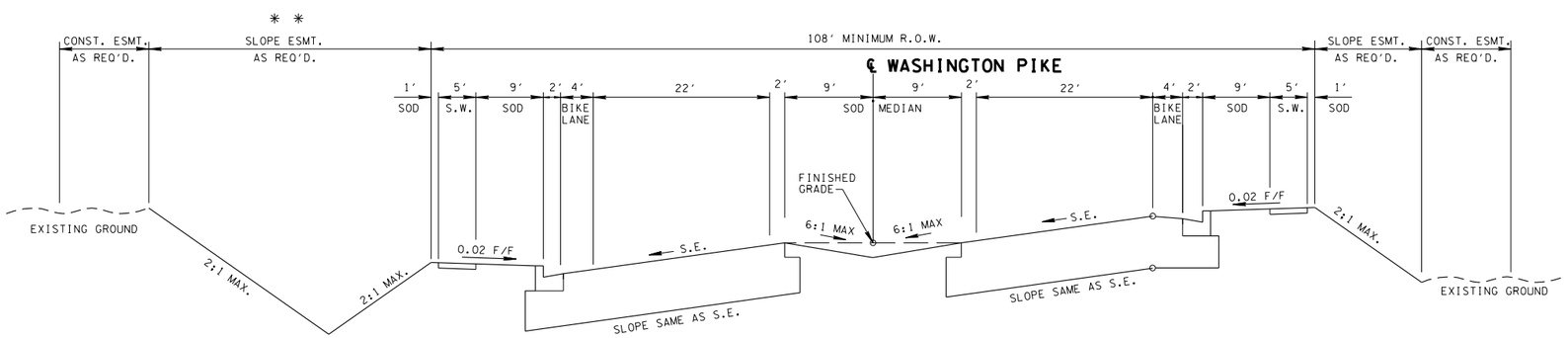

SUPERELEVATED SECTION

(BASED ON STD. DWG. RD01-TS-6 & RD01-TS-3C)

✳ ✳ INFILTRATION BASIN

CITY OF KNOXVILLE
KNOX COUNTY, TN

WASHINGTON PIKE
FUNCTIONAL LAYOUT

TYPICAL SECTIONS

N.T.S.

CDM Smith

m:\knoxville\washington_pk_sec2\environmental\functionalplans\Func_02_Typicals.dgn
9/6/2012
10:51:45 AM

TYPE	YEAR	PROJECT	SHEET NO.
FUNC.	2012	WASHINGTON PIKE	3

FEDERAL PROJECT NO. STP-M-9109 (69)
STATE PROJECT NO. 47953-1516-54
PIN NO. 043090.00

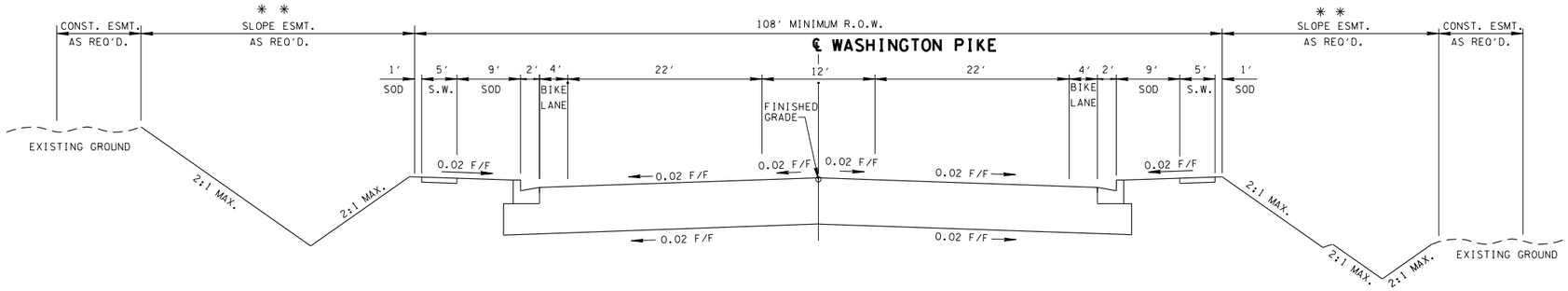

TANGENT SECTION

(BASED ON STD. DWG. RD01-TS-6 & RD01-TS-3C)

✳ ✳ INFILTRATION BASIN

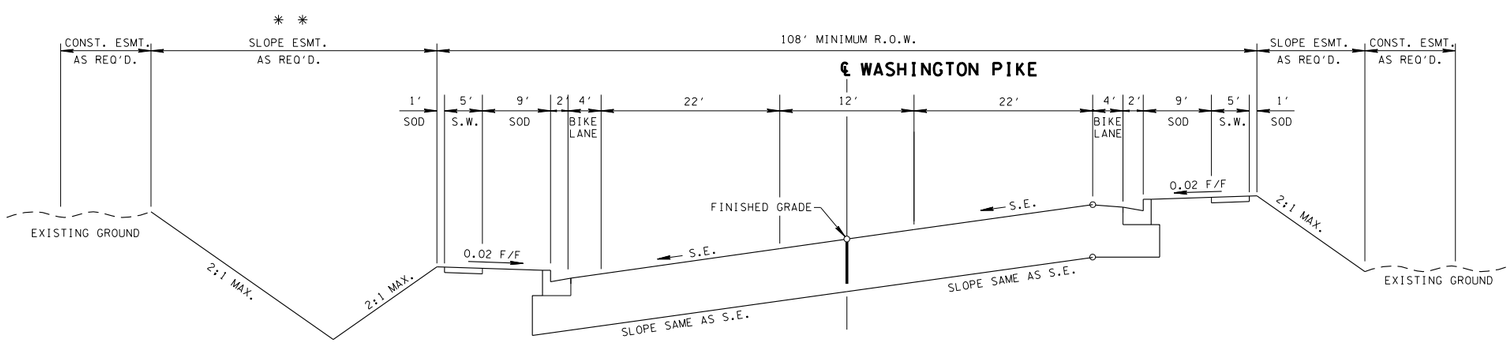

SUPERELEVATED SECTION

(BASED ON STD. DWG. RD01-TS-6 & RD01-TS-3C)

CITY OF KNOXVILLE
KNOX COUNTY, TN

WASHINGTON PIKE
FUNCTIONAL LAYOUT

TYPICAL SECTIONS

CDM Smith

m:\knoxville\washington_pk_sec2\environmental\functionalplans\Func_02_Typicals.dgn
9/6/2012
10:51:46 AM

TYPE	YEAR	PROJECT	SHEET NO.
FUNC.	2012	WASHINGTON PIKE	4

FEDERAL PROJECT NO. STP-M-9109 (69)
STATE PROJECT NO. 47953-1516-54
PIN NO. 043090.00

CITY OF KNOXVILLE
KNOX COUNTY, TN

WASHINGTON PIKE
FUNCTIONAL LAYOUT

BEGIN PROJ. TO STA.14+00.00

SCALE = 1" = 50'

CDM Smith

m:\knoxville\washington_pk_sec2\environmental\functionalplans\Func_04.dgn
9/6/2012
10:51:48 AM

TYPE	YEAR	PROJECT	SHEET NO.
FUNC.	2012	WASHINGTON PIKE	5

FEDERAL PROJECT NO. STP-M-9109 (69)
STATE PROJECT NO. 47953-1516-54
PIN NO. 043090.00

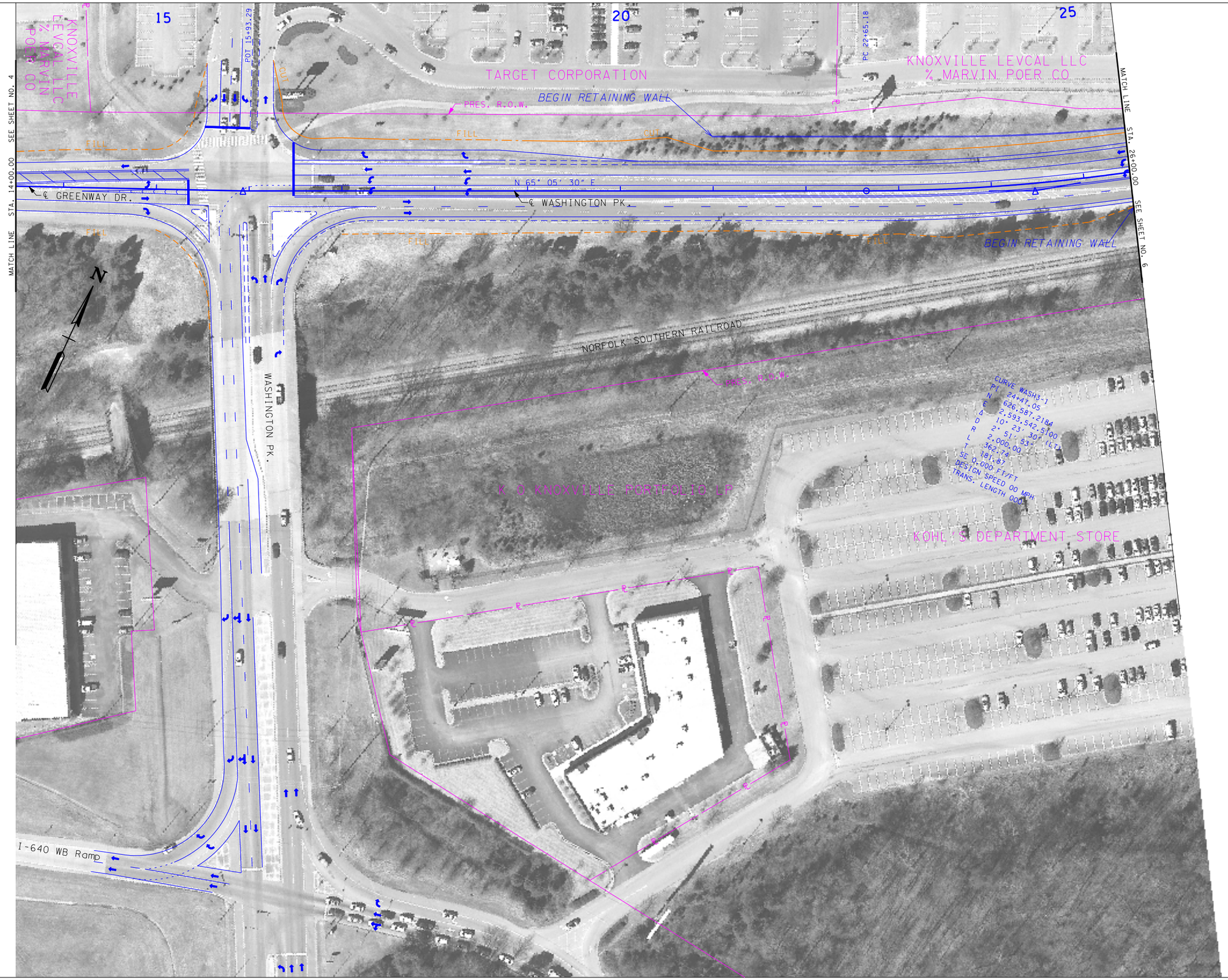

CITY OF KNOXVILLE
KNOX COUNTY, TN

WASHINGTON PIKE
FUNCTIONAL LAYOUT

STA.14+00.00 TO STA.26+00.00

SCALE = 1" = 50'

CDM Smith

m:\knoxville\washington_pk_sec2\environmental\functionalplans\func_05.dgn
9/6/2012
10:51:50 AM

TYPE	YEAR	PROJECT	SHEET NO.
FUNC.	2012	WASHINGTON PIKE	6

FEDERAL PROJECT NO. STP-M-9109 (69)
STATE PROJECT NO. 47953-1516-54
PIN NO. 043090.00

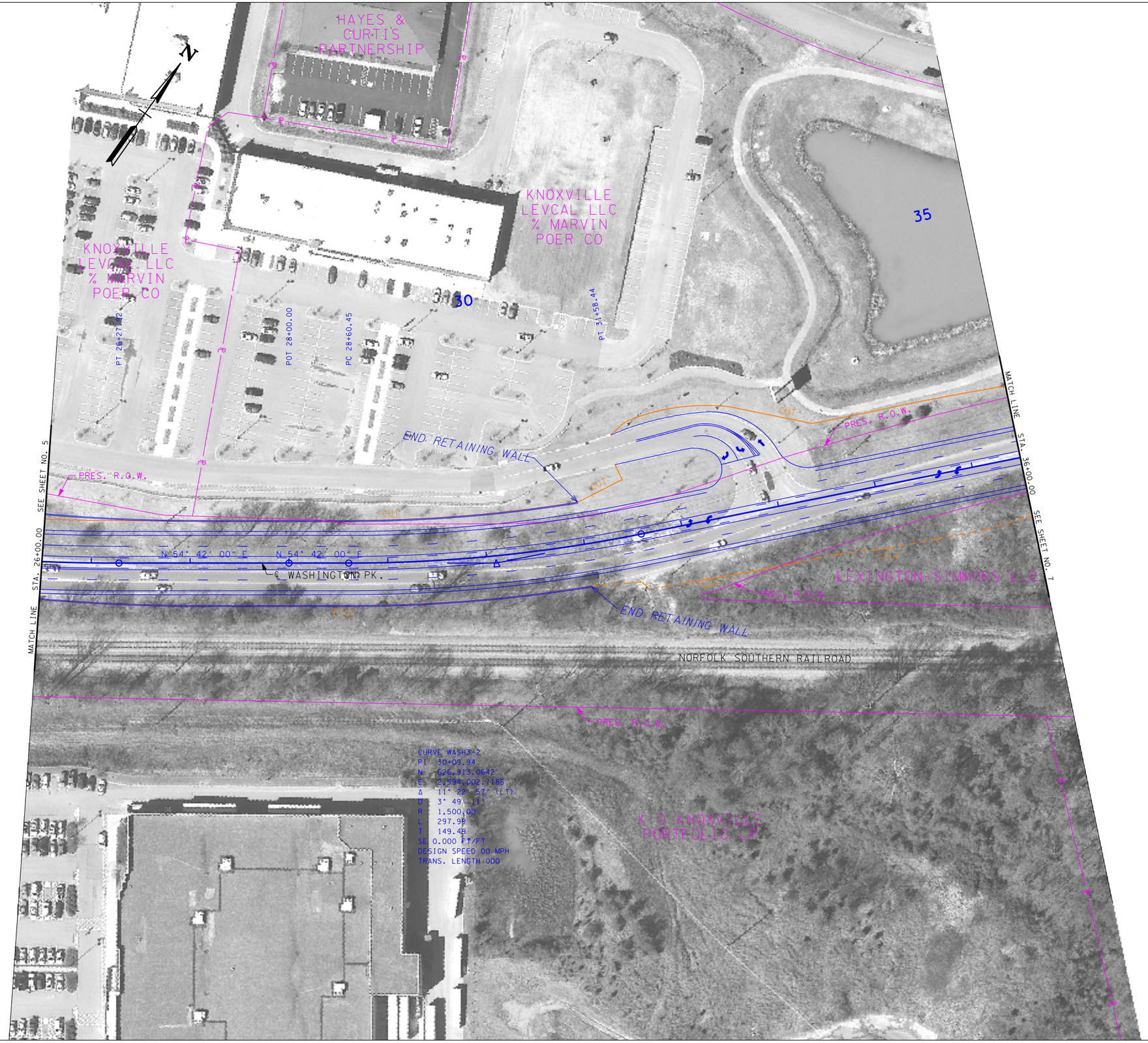

CITY OF KNOXVILLE
KNOX COUNTY, TN

WASHINGTON PIKE
FUNCTIONAL LAYOUT

STA.26+00.00 TO STA.36+00.00

SCALE = 1" = 50'

CDM Smith

m:\knoxville\washington_pk.sec2\environmental\functionalplans\Func.06.dgn
9/6/2012
10:54:52 AM

TYPE	YEAR	PROJECT	SHEET NO.
FUNC.	2012	WASHINGTON PIKE	7

FEDERAL PROJECT NO. STP-M-9109 (69)
STATE PROJECT NO. 47953-1516-54
PIN NO. 043090.00

CITY OF KNOXVILLE
KNOX COUNTY, TN

WASHINGTON PIKE
FUNCTIONAL LAYOUT

STA.36+00.00 TO STA.48+00.00

SCALE = 1" = 50'

CDM Smith

m:\knoxville\washington_pk_sec2\environmental\functionalplans\Func_07.dgn
9/6/2012
10:51:54 AM

TYPE	YEAR	PROJECT	SHEET NO.
FUNC.	2012	WASHINGTON PIKE	8

FEDERAL PROJECT NO. STP-M-9109 (69)
STATE PROJECT NO. 47953-1516-54
PIN NO. 043090.00

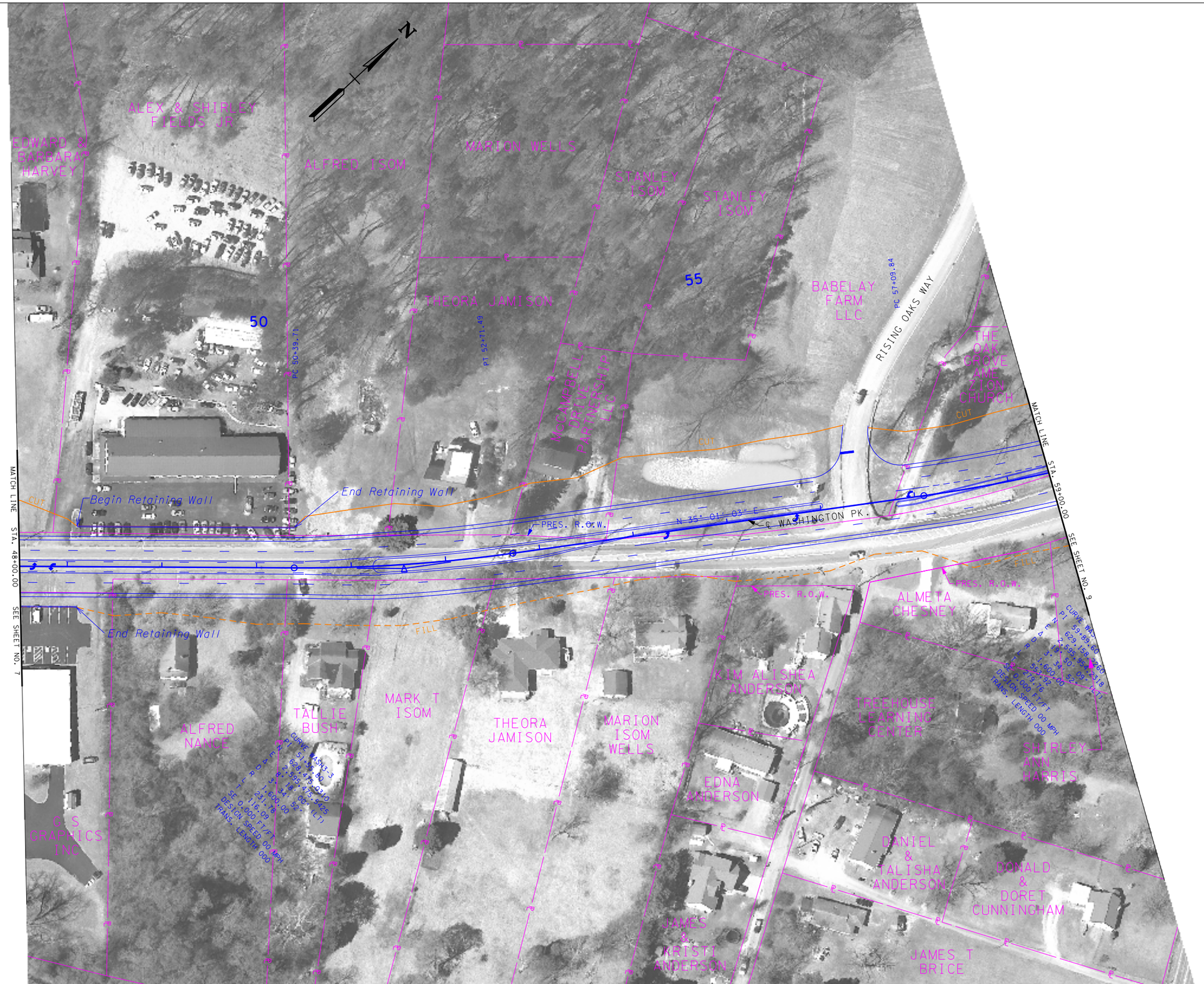

CITY OF KNOXVILLE
KNOX COUNTY, TN

WASHINGTON PIKE
FUNCTIONAL LAYOUT

STA.48+00.00 TO STA.59+00.00

SCALE = 1" = 50'

CDM Smith

m:\knoxville\washington_pk_sec2\environmental\functionalplans\Func_08.dgn
9/6/2012
10:45:56 AM

TYPE	YEAR	PROJECT	SHEET NO.
FUNC.	2012	WASHINGTON PIKE	9

FEDERAL PROJECT NO. STP-M-9109 (69)
STATE PROJECT NO. 47953-1516-54
PIN NO. 043090.00

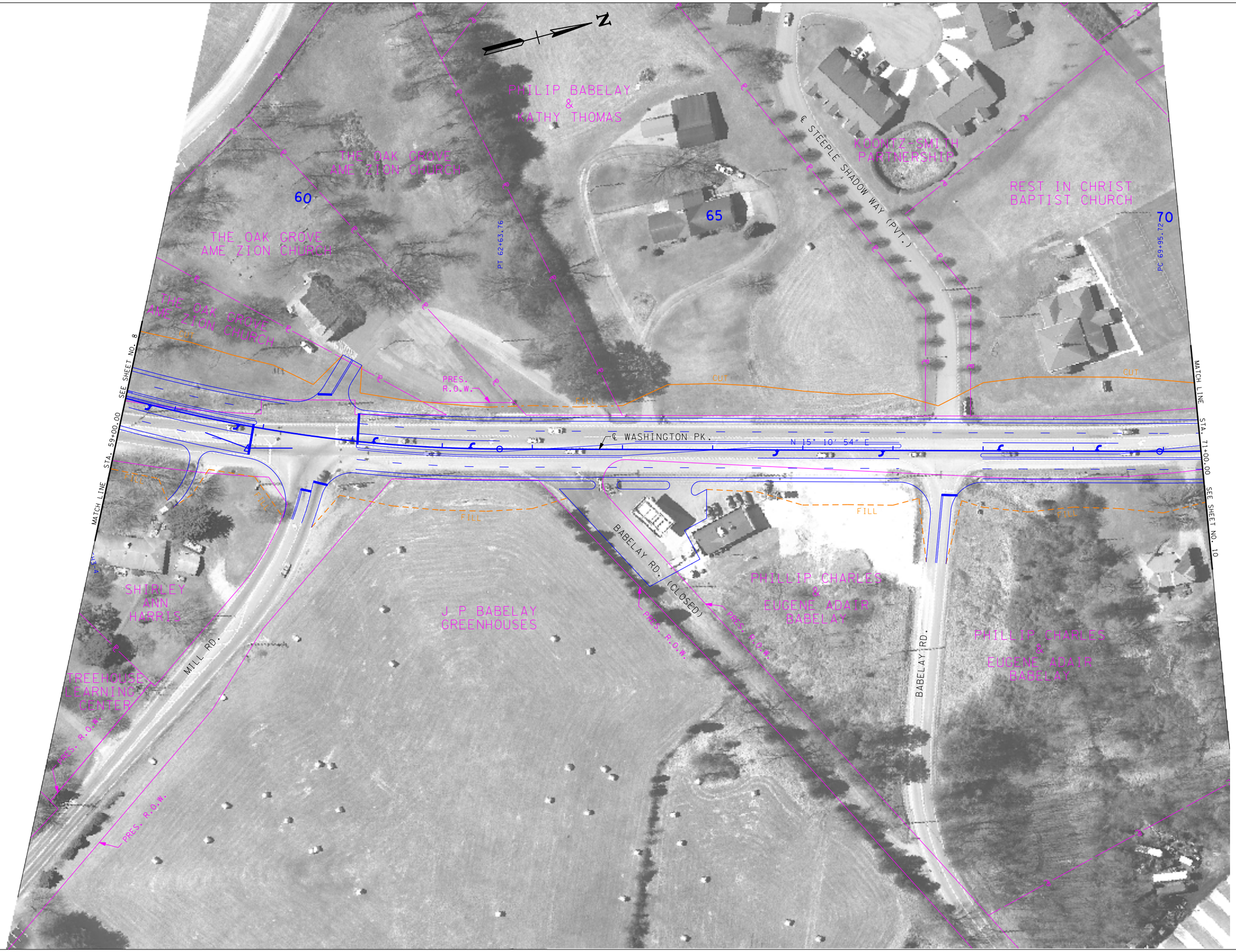

CITY OF KNOXVILLE
KNOX COUNTY, TN

WASHINGTON PIKE
FUNCTIONAL LAYOUT

STA.59+00.00 TO STA.71+00.00

SCALE = 1" = 50'

CDM Smith

m:\knoxville\washington_pk_sec2\environmental\functionalplans\Func_09.dgn
9/6/2012
10:51:58 AM

TYPE	YEAR	PROJECT	SHEET NO.
FUNC.	2012	WASHINGTON PIKE	10

FEDERAL PROJECT NO. STP-M-9109 (69)
STATE PROJECT NO. 47953-1516-54
PIN NO. 043090.00

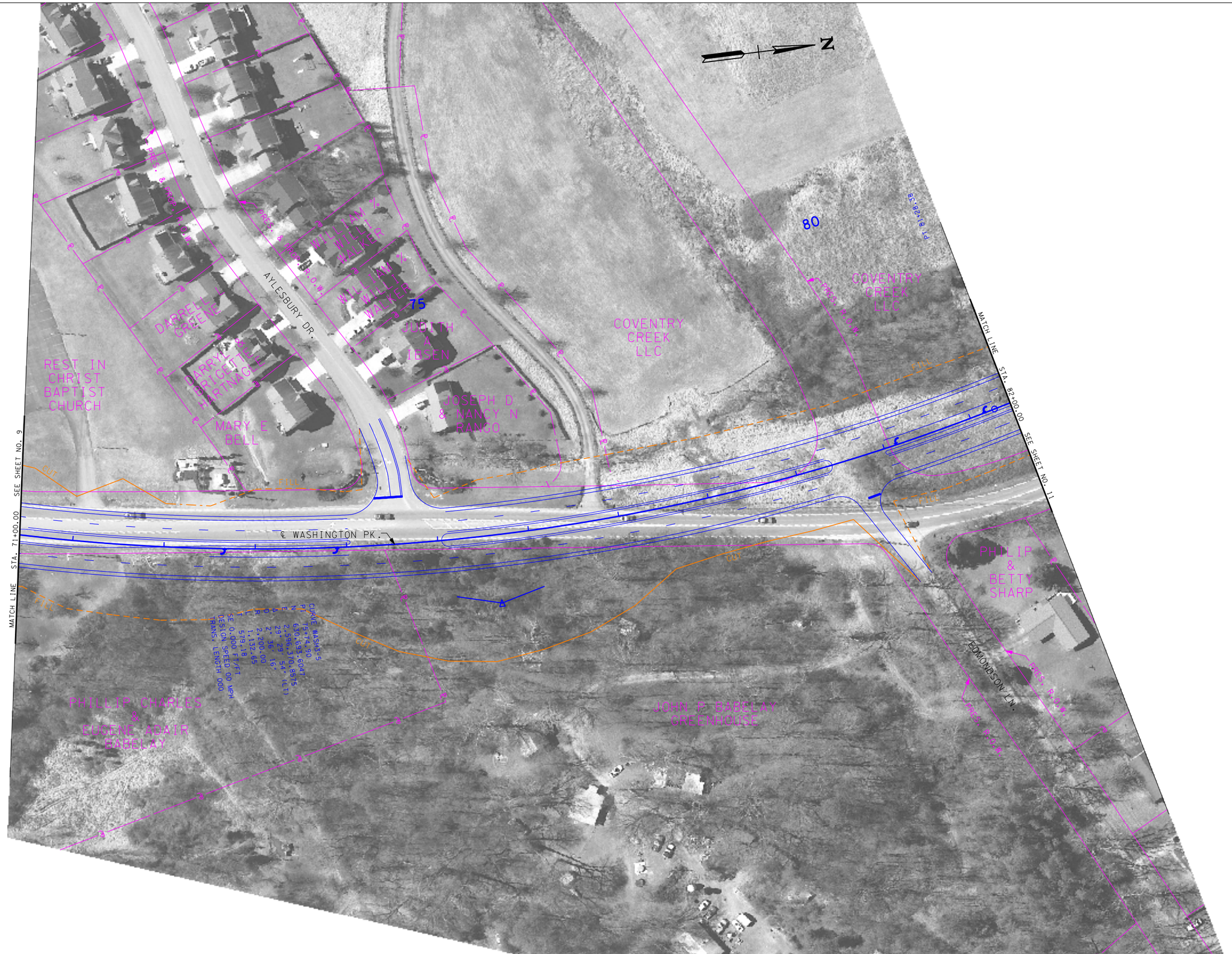

CITY OF KNOXVILLE
KNOX COUNTY, TN

WASHINGTON PIKE
FUNCTIONAL LAYOUT

STA.71+00.00 TO STA.82+00.00

SCALE = 1" = 50'

CDM Smith

m:\knoxville\washington_pk_sec2\environmental\functionalplans\Func_10.dgn
9/6/2012
10:52:00 AM

TYPE	YEAR	PROJECT	SHEET NO.
FUNC.	2012	WASHINGTON PIKE	11

FEDERAL PROJECT NO. STP-M-9109 (69)
STATE PROJECT NO. 47953-1516-54
PIN NO. 043090.00

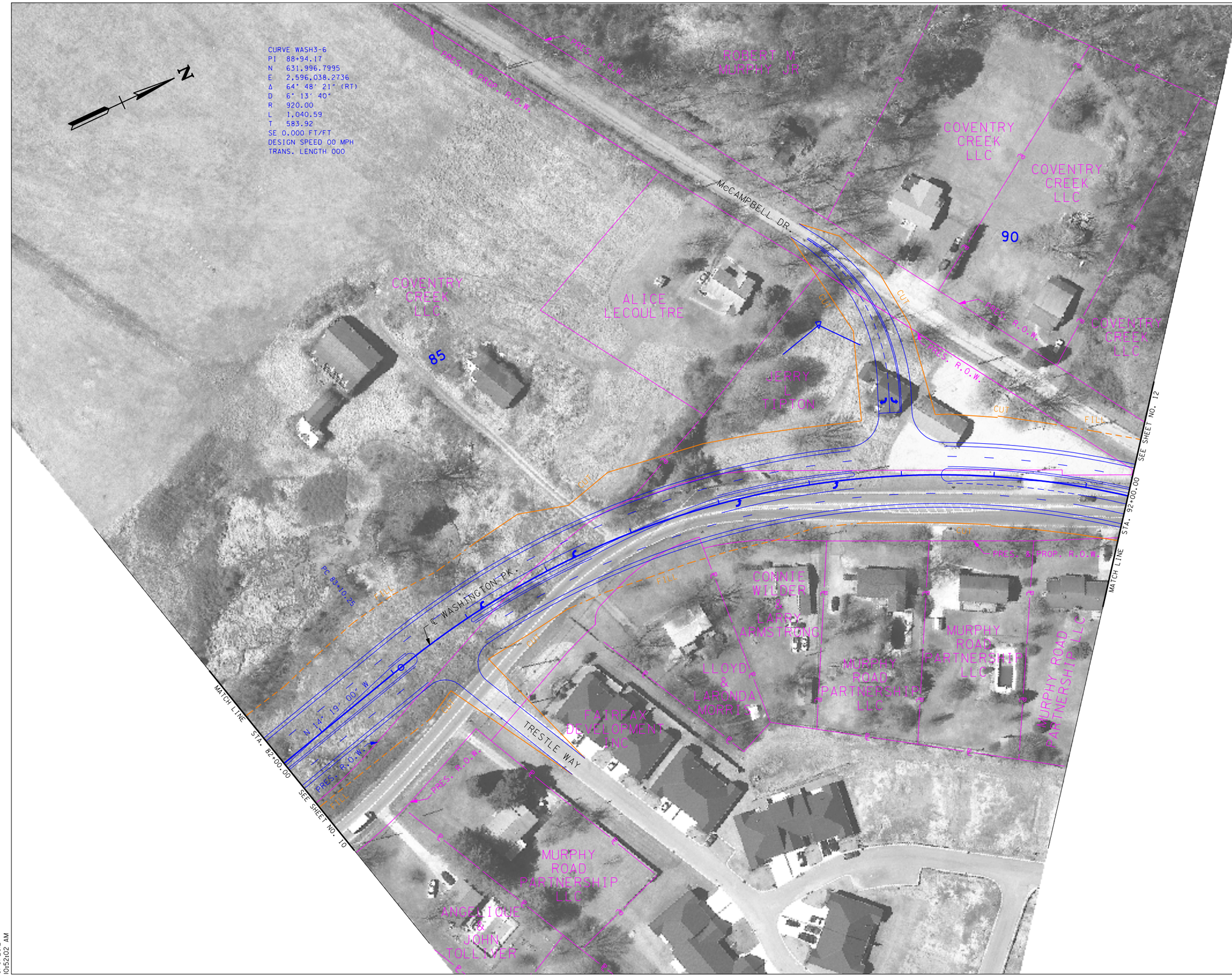

CITY OF KNOXVILLE
KNOX COUNTY, TN

WASHINGTON PIKE
FUNCTIONAL LAYOUT

STA.82+00.00 TO STA.92+00.00

SCALE = 1" = 50'

CDM Smith

m:\knoxville\washington_pk_sec2\environmental\functionalplans\Func_11.dgn
9/6/2012
10:52:02 AM

TYPE	YEAR	PROJECT	SHEET NO.
FUNC.	2012	WASHINGTON PIKE	12

FEDERAL PROJECT NO. STP-M-9109 (69)
STATE PROJECT NO. 47953-1516-54
PIN NO. 043090.00

CITY OF KNOXVILLE
KNOX COUNTY, TN

WASHINGTON PIKE
FUNCTIONAL LAYOUT

STA.92+00.00 TO END OF PROJ.

SCALE = 1" = 50'

CDM Smith

m:\knoxville\washington_pk_sec2\environmental\functional plans\func_12.dgn
9/6/2012
10:52:04 AM