CITY OF KNOXVILLE

LAND DEVELOPMENT MANUAL

CITY OF KNOXVILLE

ENGINEERING DEPARTMENT

STORMWATER ENGINEERING DIVISION

REVISIONS

The Knoxville Land Development Manual (LDM) is published and maintained by the Stormwater Engineering Section. The following timeline shows the list of revision dates:

Date		Development of the Knoxville Land Development Manual
February 2002 ☆	**Rev. 0**	Initial distribution of the Land Development Manual. The local engineering community is notified by letter and in the annual Engineering Development Seminar. **The Knoxville Land Development Manual is now ready for use.** Please reference the publish date as "**February 2002**".
August 2002	Rev. 1	Minor corrections and grammar fixes. Revised the plans review and plat review checklists. Revised Policy #17 and added Policy #20.
February 2003	Rev. 2	Revised the plat review checklist. Added a new form for Property Owner Acknowledgement. Revised Policy #17.
June 2003 ★	**Rev. 3**	**Extensive revisions** to match the revised Stormwater & Street Ordinance, the reissued NPDES municipal permit, the revised Knoxville BMP Manual, and other state/federal regulations.
December 2003	Rev. 4	Revisions to the Flood Damage Prevention and Control Ordinance (Chapter 12 of City Code) was approved by City Council on 12/09/03. Ordinance reference callouts are corrected at the end of each section for the Stormwater & Street Ordinance, which was revised by City Council on 5/13/03.
May 2004	Rev. 5	Withdrew Policy 13 (Sixty-Day Letter) and Policy 24 (Plat Procedure For Residential Subdivision) as being inconsistent with city ordinances. Revised the table of contents, Chapter 2, Figures 2-2 through 2-4, site development review checklist, plat review checklist, Appendix C flysheet, and Policy 12.
July 2004	Rev. 6	Revised Policy 22 (Stream Buffer Zone) within Appendix C.
May 2005	Rev. 7	Revised the Stormwater and Street Ordinance in Appendix B. Very minor corrections and format change to the other 3 ordinances in Appendix B.
November 2005	Rev. 8	Added new Policy 24 (Appealed Concept Plan) within Appendix C.
March 2006	Rev. 9	Revised Forms A, E, I, K, L and N within Appendix A. Revised Policy 24 (Appealed Concept or Use-on-Review Plan) within Appendix C.
June 2006	Rev. 10	Revised Forms E, F, M1 and M2 within Appendix A. Revised Policies 12 (Sinkhole Development) & 15 (Stormwater Message for Curb Irons and Manhole Lids) within Appendix C.
November 2006	Rev. 11	Revised Chapter 11 (Floodplain Design) and Policy 14 (Stormwater Enforcement Guidelines) within Appendix A.
December 2006	Rev. 12	Revised Policy 7 (Maintenance Responsibility for Stormwater Drainage Systems) within Appendix C.

REVISIONS (continued)

The Knoxville Land Development Manual (LDM) is published and maintained by the Stormwater Engineering Section. The following timeline shows the list of revision dates:

Date		Development of the Knoxville Land Development Manual
April 2007	Rev. 13	Revised Forms M2, M3 M4 and M5 within Appendix A.
April 2008	Rev. 14	Revised Forms A, B, E1 and F within Appendix A. Added Form E2 (Site Development Submittal Review Checklist) within Appendix A.
September 2008	Rev. 15	Revised Policy 16 (Stormwater Pipe Materials) within Appendix C.
April 2009	Rev. 16	Revised Policy 8 (Partial Plat Process) and added new Policy 25 (Post-Construction Water Quality Control for Proprietary Flow-Through Best Management Practices (BMP's) within Appendix C.
July 2009	Rev. 17	Revised Form N within Appendix A.
September 2009	Rev. 18	Revised Form E1 (Site Development Review Checklist) within Appendix A and Policy 7 (Maintenance Responsibility for Stormwater Drainage Systems) within Appendix C.
October 2009	Rev. 19	Revised Policy 25 (Post-Construction Water Quality Control for Proprietary Flow-Through Best Management Practices (BMP's) and added new Policy 25 List A - Sizing Guidelines within Appendix C.
December 2009	Rev. 20	Revised Policy 17 (Survey Control System Requirements) within Appendix C.
January 2010	Rev. 21	Revised Form E1 (Site Development Review Checklist) within Appendix A.
March 2010	Rev. 22	Revised Form G (Site Inspection Checklist) and Form H (Development Certification Checklist) within Appendix A and Policy 25 List A (Sizing Guidelines) in Appendix C.
April 2010	Rev. 23	Revised Policy 25 List A (Sizing Guidelines) and added Policy 26 (Utility Maintenance and Construction), both within Appendix C.
June 2010	Rev. 24	Revised Policy 25 List A (Sizing Guidelines) within Appendix C.
April 2011	Rev. 25	Revised Policy 25 List A (Sizing Guidelines) within Appendix C.
July 2011	Rev. 26	Revised Policy 25 List A (Sizing Guidelines) within Appendix C.
December 2011	Rev. 27	Revised Policy 25 List A (Sizing Guidelines) within Appendix C.
March 2012	Rev. 28	Revised Form B within Appendix A and Revised Hyperlinks for Appendix B – Selected City Ordinances for Land Development.
June 2012	Rev. 29	Replaced Policy 14 (Stormwater Enforcement Guidelines) with Policy 14 (Stormwater Enforcement Response Plan) within Appendix C.

REVISIONS (continued)

The Knoxville Land Development Manual (LDM) is published and maintained by the Stormwater Engineering Section. The following timeline shows the list of revision dates:

Date		Development of the Knoxville Land Development Manual
July 2012	Rev. 30	Revised Policy 14 (Stormwater Enforcement Guidelines) and Policy 25 List A - Sizing Guidelines within Appendix C.
October 2012	Rev. 31	Revised Policy 21 (No-Fill Line) within Appendix C.
February 2013	Rev. 32	Revised Chapter 11 (Floodplain Design) within the Main Text, Revised Form F (Plat Review Checklist) within Appendix A, Revised Policy 25 List A (Sizing Guidelines) within Appendix C, and Removed Policy 22 (Stream Buffer Zone (Restricted-Use)) in Appendix C.
March 2013	Rev. 33	Added new Policy 27 (Qualified Local Program Construction General Permit) within Appendix C.
April 2013	Rev. 34	Revised Policy 14 (Stormwater Enforcement Guidelines) and Policy 25 List A - Sizing Guidelines within Appendix C.
June 2013	Rev. 35	Revised Policy 17 (Survey Control System Requirements) Policy 25 List A - Sizing Guidelines and Policy 27 (Qualified Local Program Construction General Permit) within Appendix C.
July 2013	Rev. 36	Revised Chapter 5 (Permitting Requirements) within the main text and Form F (Plat Review Checklist), Form Q (NOI/SWPPP Review Checklist) & Policy 5 (Easements for Stormwater Control and Water Quality Facilities within Appendix C.
October 2013	Rev. 37	Revised Form A (Site Development Permit Application), Form B (Property Owner Acknowledgement) and Form F (Plat Review Checklist) within Appendix A.
December 2013	Rev. 38	Revised Form F (Plat Review Checklist) within Appendix A.
January 2014	Rev. 39	Revised Form M2 (SPAP - Food Handling & Processing Facilities), Form M3 (SPAP - Vehicle & Equipment Facilities), Form M4 (SPAP - Vehicle Wash Facilities) and Form M5 (SPAP - Large Parking Lot Facilities) within Appendix A and Revised the Stormwater and Street Ordinance in Appendix B to reflect Ordinance O-112-2013 adopted June 25, 2013.
May 2014	Rev. 40	Revised Policy 16 (Stormwater Pipe Materials) within Appendix C and Abbreviations and Acronyms within the Main Text.
July 2014	Rev. 41	Revised Policy 17 (Survey Control System Requirements) within Appendix C.
July 2014	Rev. 42	Revised Policy 9 (Performance and Indemnity Agreement) within Appendix C.
August 2014	Rev. 42	Revised application in Policy 8 (Partial Plat Process) within Appendix C.
September 2014	Rev. 44	Revised Policy 20 (No-Rise Certification for Floodway Encroachment) within Appendix C.

REVISIONS (continued)

The Knoxville Land Development Manual (LDM) is published and maintained by the Stormwater Engineering Section. The following timeline shows the list of revision dates:

Date		Development of the Knoxville Land Development Manual
October 2014	Rev. 45	Revised Policy 25 List A (Sizing Guidelines) within Appendix C.
June 2015	Rev. 46	Revised Policy 7 (Maintenance Responsibility for Stormwater Drainage Systems) within Appendix C.
September 2015	Rev. 47	Revised Policy 16 (Stormwater Pipe Materials) within Appendix C.
July 2016	Rev. 48	Revised Policy 8 (Partial Plat Process) within Appendix C.
September 2016	Rev. 49	Added Policy 28 (Utility Access Driveways) within Appendix C.

TABLE OF CONTENTS

	PAGE
Title Page	i
Revisions Page	ii
Table of Contents	vi
List of Figures and Tables	xii
List of Abbreviations and Acronyms	xiii

Chapter 1 INTRODUCTION

1.1	**Purpose**	1-1
1.2	**Scope**	1-1
1.3	**Authorization**	1-2
1.4	**Design Objectives**	1-3
1.5	**Engineering Design Accountability**	1-3
1.6	**Legal Aspects**	1-4
1.7	**Language and Interpretation of Text**	1-4

Chapter 2 PLAN AND PLAT REVIEW PROCESS

2.1	**Overall Sequence for Large Projects**	2-1
2.2	**Site Development Permit Application**	2-4
2.3	**Site Development Flowcharts for Large Projects**	2-5

Chapter 3 AVAILABLE RESOURCES

3.1	**Overview**	3-1
3.2	**Engineering Department Website**	3-1
3.3	**Technical Services Counter**	3-2
3.4	**Metropolitan Planning Commission (MPC)**	3-3
3.5	**Knoxville Inspections Bureau**	3-3
3.6	**Tennessee State Board of Architectural and Engineering Examiners**	3-3
3.7	**Tennessee Department of Transportation (TDOT)**	3-4
3.8	**Federal Highway Administration (FHWA)**	3-4
3.9	**Knoxville / Knox Co. / KUB Geographic Information System (KGIS)**	3-4

PAGE

Chapter 4 PROPERTY REGULATIONS

4.1	**Introduction**	4-1
4.2	**Origin of Zoning Powers**	4-2
4.3	**State Regulations for Land Surveyors**	4-3
4.4	**Subdivision Requirements**	4-4
4.5	**Easement and Right-Of-Way Dedications**	4-5
4.6	**Engineering Plat Review**	4-5
4.7	**Right-Of-Way Closure**	4-6

Chapter 5 PERMITTING REQUIREMENTS

5.1	**City Permits**	5-1
5.2	**State Permits**	5-3
5.3	**Federal Permits**	5-4

Chapter 6 SMALL SINGLE FAMILY RESIDENTIAL DEVELOPMENT

6.1	**Overview For SSFR**	6-1
6.2	**Plan Submittal Requirements**	6-1
6.3	**Typical Concerns**	6-2

Chapter 7 LARGE RESIDENTIAL AND COMMERCIAL DEVELOPMENT

7.1	**Overview For LRCD**	7-1
7.2	**City Regulations**	7-1
7.3	**Site Development Plan**	7-2
7.4	**Erosion and Sediment Control Plan**	7-3
7.5	**Landscaping Plan**	7-4
7.6	**Work Zone Traffic Control Plan**	7-6
7.7	**Roadway Plan**	7-6

PAGE

Chapter 8 OVERALL STORMWATER PLANNING

8.1	**Objectives for Stormwater Planning**	8-1
8.2	**Stormwater Quantity and Quality Considerations**	8-2
8.3	**Open Systems Versus Closed Systems**	8-2
8.4	**Minor and Major Drainage Systems**	8-3
8.5	**Watersheds and Regional Planning**	8-4
8.6	**Total Maximum Daily Load (TMDL)**	8-7
8.7	**Preservation of Natural Creeks and Streams**	8-7
8.8	**Sinkholes**	8-8

Chapter 9 STORMWATER DESIGN

9.1	**Hydrology Methods**	9-1
9.2	**Functional Design of Stormwater Drainage Systems**	9-1
9.3	**Design of Open Channels**	9-2
9.4	**Design of Curb and Grate Inlets**	9-2
9.5	**Design of Storm Drainage Systems**	9-4
9.6	**Design of Culverts**	9-4
9.7	**Hydraulic Grade Line Computations**	9-5
9.8	**Analysis of Downstream System**	9-6

Chapter 10 STORMWATER DETENTION AND QUALITY

10.1	**Detention Requirements**	10-1
10.2	**Design Criteria for Detention Structures**	10-1
10.3	**Stormwater Quality Considerations**	10-3
10.4	**Permanent Maintenance Agreements**	10-4
10.5	**Facility and Access Easements**	10-4

Chapter 11 FLOODPLAIN DESIGN

11.1	**Overview of Floodplains**	11-1
11.2	**Floodplain Regulations**	11-3
11.3	**Estimating Peak Flows**	11-4
11.4	**Floodplain Modeling**	11-4
11.5	**Floodway and Floodplain Revisions**	11-5

PAGE

Chapter 12 STREET DESIGN CRITERIA

12.1	**Overall Design Guidelines**	12-1
12.2	**Acceptance as Public Streets**	12-2
12.3	**Horizontal Geometry**	12-3
12.4	**Vertical Geometry**	12-4
12.5	**Sight Distance**	12-6
12.6	**Pavement Sections**	12-8
12.7	**Traffic Considerations**	12-9
12.8	**Traffic Signs**	12-9
12.9	**Coordination With Utilities**	12-10
12.10	**Streetlights**	12-10
12.11	**Standard Details and Technical Specifications**	12-11

Chapter 13 SITE CONSTRUCTION ADMINISTRATION

13.1	**Preconstruction Assistance Conference**	13-1
13.2	**Required Submittals and Notifications**	13-1
13.3	**Erosion and Sediment Control**	13-2
13.4	**Development Certification**	13-3
13.5	**Bond Release**	13-4

Chapter 14 SITE CONSTRUCTION ACTIVITIES

14.1	**Construction Schedules and Phases**	14-1
14.2	**Good Housekeeping and Other BMPs**	14-2
14.3	**Waste Management**	14-2
14.4	**Maintenance of Stormwater Facilities During Construction**	14-3
14.5	**Notifications of Spills and Other Releases**	14-4
14.6	**Notice of Violation (NOV)**	14-5

Chapter 15 DEFINITIONS AND REFERENCES

15.1	**Definitions From Other Documents**	15-1
15.2	**References**	15-5

Appendix A -- Stormwater Engineering Section Forms:

Form A	**Site Development Permit Application**
Form B	**Property Owner Acknowledgement Form**
Form C	**Fee Computation Worksheet**
Form D	**CPMSF Information Worksheet**
Form E1	**Site Development Review Checklist**
Form E2	**Site Development Submittal Review Checklist**
Form F	**Plat Review Checklist**
Form G	**Final Site Inspection Checklist**
Form H	**Development Certification Checklist**
Form I	**Construction R-O-W Permit**
Form J	**Floodplain Development Permit**
Form K	**Site Development Permit**
Form L	**Notice of Violation (NOV) Form**
Form M1	**Special Pollution Abatement Permit (SPAP)**
Form M2	**SPAP for Restaurant, Grocery Store or Food Handling Facility**
Form M3	**SPAP for Vehicle and Equipment Facilities**
Form M4	**SPAP for Vehicle Wash Facilities**
Form M5	**SPAP for Large Parking Lot Facilities**
Form N	**FEMA Elevation Certificate & Instructions (U.S. government form)**

Appendix B -- Selected City Ordinances for Land Development:

Chapter 12	**-**	**Flood Damage Prevention and Control**
Chapter 14	**-**	**Horticulture (Knoxville Tree Protection Ordinance)**
Chapter 22.5	**-**	**Stormwater (Knoxville Stormwater & Street Ordinance)**
Chapter 23	**-**	**Streets and Sidewalks**

Appendix C -- Engineering Policies:

Policy 01	**Access Control for Traffic and Driveways**
Policy 02	**Covenants for Permanent Maintenance of Stormwater Facilities (CPMSF)**
Policy 03	**Creek Restoration and Channel Maintenance**
Policy 04	**Drainage Easements**
Policy 05	**Easements for Stormwater Control and Water Quality Facilities**
Policy 06	**Maintenance Access for Stormwater Management Facilities**
Policy 07	**Maintenance Responsibility for Stormwater Drainage Systems**
Policy 08	**Partial Plats**
Policy 09	**Performance and Indemnity Agreements (also known as "bonds")**
Policy 10	**Retaining Walls**
Policy 11	**Sediment Disposal for Detention Basin Maintenance**
Policy 12	**Sinkhole Development**
(Policy 13)	***Policy withdrawn May 2004.*** (Sixty-Day Letter)
Policy 14	**Stormwater Enforcement Response Plan**
Policy 15	**Stormwater Message for Curb Irons and Manhole Lids**
Policy 16	**Stormwater Pipe Materials**
Policy 17	**Survey Control System Requirements**
Policy 18	**Underground Stormwater Facility Maintenance**
Policy 19	**Underground Stormwater Facility Recordkeeping and Reporting**
Policy 20	**No-Rise Certification for Floodway Encroachment**
Policy 21	**No-Fill Line**
Policy 22	**Stream Buffer Zone (Restricted-Use)**
Policy 23	**List of Studied Streams**
Policy 24	**Appealed Concept or Use-On-Review Plan**
Policy 25	**Post-Construction Water Quality Control for Proprietary Flow-Through Best Management Practices (BMP's)**
Policy 26	**Utility Construction and Maintenance**
Policy 27	**Qualified Local Program Construction General Permit**

LIST OF FIGURES

			PAGE
Figure 2-1	**Overall Project Sequence for Large Projects**		2-3
Figure 2-2	**Site Development Review**	(flowchart, sheet 1)	2-6
Figure 2-3	**Plat Submittal Review**	(flowchart, sheet 2)	2-7
Figure 2-4	**Construction Inspections**	(flowchart, sheet 3)	2-8
Figure 7-1	**Tree Location Requirements on Drawings**		7-5
Figure 8-1	**Knox County Drainage Overview**		8-4
Figure 9-1	**Street Pavement Drainage Section**		9-3
Figure 10-1	**Typical Detention Hydrograph**		10-1
Figure 11-1	**Typical Natural Floodplain**		11-2
Figure 11-2	**Typical Developed Floodplain**		11-2

In addition, there are several diagrams included in the FEMA Flood Certificate (in Appendix A). The Stormwater Engineering Section Policies (in Appendix C) also contain many figures and drawings which are not listed on this page.

LIST OF TABLES

		PAGE
Table 8-1	**List of Watersheds Within the City of Knoxville**	8-6
Table 9-1	**Hydrology Design Methods**	9-1
Table 9-2	**Hydraulic Grade Line Computation Form**	9-8
Table 12-1	**Horizontal Geometry for Streets**	12-4
Table 12-2	**Vertical Geometry for Streets**	12-5
Table 12-3	**Stopping Sight Distance**	12-7
Table 14-1	**Sources for Waste Management Guidance**	14-3
Table 15-1	**Sources for Land Development Definitions**	15-1
Table 15-2	**List of Definitions**	15-2 to 15-4

The Stormwater Engineering Section Policies (in Appendix C) also contain many tables which are not listed on this page.

LIST OF ABBREVIATIONS AND ACRONYMS

AASHTO	American Association of State and Highway Transportation Officials
ACI	American Concrete Institute
ADA	Americans with Disabilities Act
AMC	Antecedent Moisture Conditions
ANSI	American National Standards Institute
ARAP	Aquatic Resource Alteration Permit (which is a TDEC permit)
ASTM	American Society for Testing and Materials
BEA	Board of Environmental Appeals
BFE	Base Flood Elevation
BMP	Best Management Practice
BZA	Board of Zoning Appeals
CADD	Computer Aided Drafting & Design
CESQG	Conditionally Exempt Small Quantity Generator
CFR	Code of Federal Register
CLOMA	Conditional Letter of Map Amendment
CLOMR	Conditional Letter of Map Revision
CMP	Corrugated Metal Pipe
CN	Curve Number
COK	City of Knoxville
CPI	Coalescing Plate Interceptor (oil/water separator)
CPMSF	Covenants for Permanent Maintenance of Stormwater Facilities
CRS	Community Rating System
CWA	Clean Water Act
DCIA	Directly Connected Impervious Area
ESCP	Erosion and Sediment Control Plan
FBFM	Flood Boundary and Floodway Map
FEMA	Federal Emergency Management Administration
FFE	Finished Floor Elevation
FHWA	Federal Highway Administration
FIRM	Flood Insurance Rate Map
FIS	Flood Insurance Study
GIS	Geographic Information Systems (see KGIS)
H:V	Horizontal to Vertical (ratio that indicates slope steepness)
HDPE	High-Density Polyethylene (pipe)
HDS	Hydraulic Design Series (published by FHWA)
HEC	Hydraulic Engineering Circular (published by FHWA)
HEC	Hydraulic Engineering Center (USACE water research organization)
HEC-HMS	Hydraulic Modeling System (USACE software program, equivalent to HEC-1)
HEC-RAS	River Analysis System (USACE software program, equivalent to HEC-2)

HGL	Hydraulic Grade Line
HHW	Household Hazardous Waste Collection Center (City of Knoxville)
HUC	Hydrologic Unit Code (used by USGS to label river watersheds)
JPE	Joint Permanent Easement
KGIS	Knoxville/Knox County/KUB Geographic Information Systems
KUB	Knoxville Utilities Board
KZO	Knoxville Zoning Ordinance
LDM	Land Development Manual
LHW	Licensed Hazardous Waste Contractor
LOMA	Letter of Map Amendment
LOMR	Letter of Map Revision
LRCD	Large Residential and Commercial Development
MPC	Metropolitan Planning Commission
MRP	Major Road Plan
MSDS	Material Safety Data Sheet
MSR	Minimum Subdivision Regulations of Knoxville and Knox County
MS4	Municipal Separate Storm Sewer System (a designation used by USEPA)
MUTCD	Manual on Uniform Traffic Control Devices
NAVD88	North American Vertical Datum of 1988
NGVD29	National Geodetic Vertical Datum of 1929
NFIP	National Flood Insurance Program
NFPA	National Fire Protection Association
NOI	Notice of Intent
NOV	Notice of Violation
NPDES	National Pollutant Discharge Elimination System
NPS	Nonpoint Source
NRCS	National Resources Conservation Service (formerly called SCS)
OSHA	Occupational Safety and Health Administration
PE	Professional Engineer (licensed in the State of Tennessee)
PIA	Performance and Indemnity Agreement (also called construction bond)
RCP	Reinforced Concrete Pipe
RCRA	Resource Conservation and Recovery Act
RLS	Registered Land Surveyor (licensed in the State of Tennessee)
ROW	Right-Of-Way (or also sometimes “R/W”)
RQ	Reportable Quantity
RUSLE	Revised Universal Soil Loss Equation
SARA	Superfund Amendments and Reauthorization Act (Right-to-Know)
SCS	Soil Conservation Service (now called NRCS)
SFHA	Special Flood Hazard Area
SOP	Standards of Practice (state regulations for land surveyors)
SPAP	Special Pollution Abatement Permit
SPCC	Spill Prevention Control and Countermeasures
SSO	Sanitary Sewer Overflow
SSFR	Small Single Family Residential (Development)
SWMF	Solid Waste Management Facility (on Elm Street)
SWPPP	Stormwater Pollution Prevention Plan

TCA	Tennessee Code Annotated
TCP	Traffic Control Plan
TDEC	Tennessee Department of Environment and Conservation
TDOT	Tennessee Department of Transportation
TMDL	Total Maximum Daily Load
TPO	(Knoxville Regional) Transportation Planning Organization
TR-55	Technical Release 55 (June 1986, SCS - a standard drainage reference)
TTCP	Temporary Traffic Control Permit
TVA	Tennessee Valley Authority
UGST	Underground Storage Tank
USACE	United States Army Corps of Engineers
USBR	United States Bureau of Reclamation
USDOT	United States Department of Transportation
USEPA	United States Environmental Protection Agency
USGS	United States Geological Survey
UT	University of Tennessee
WSE	Water Surface Elevation
WZTCP	Work Zone Traffic Control Policy

Abbreviations for units that are commonly used throughout the BMP Manual:

Ac	Acres	Area
Ac-ft	Acre-feet	Volume
Cfs	Cubic feet per second	Flow
Fps	Feet per second	Velocity
Ft	Feet	Length
Gpm	Gallons per minute	Flow
Mg/l	Milligrams per liter	Concentration
Ppm	Parts per million	Concentration
Sf	Square feet	Area
Sq.mi.	Square miles	Area
º F	Degrees Fahrenheit	Temperature

Chapter 1
INTRODUCTION

Purpose

The purpose of the Land Development Manual is to establish minimum standards for design and construction of site grading and site development projects within the City of Knoxville. The minimum standards for site and land development are intended to protect and promote the general welfare of all citizens by accomplishing these goals:

- Design/construction of safe and durable streets, driveways and parking lots.
- Design/construction of stormwater drainage systems to reduce flooding.
- Complete and accurate plans to ensure grading and property issues are addressed.
- Measures to control erosion and sediment during construction.
- Reduction and control of stormwater pollution through good design features.

The Land Development Manual will assist developers, engineers, contractors, inspectors and property owners in the best practical design for site development and redevelopment activities within the city of Knoxville. This manual contains the minimum requirements applicable to most properties; however, the design engineer (with assistance from other design professionals as needed) must thoroughly investigate field conditions and coordinate all design efforts.

Major objectives for the Land Development Manual, in terms of protecting the general public, are focused on providing good stormwater and street design to satisfy requirements of the City of Knoxville Stormwater Engineering Division (which is part of the Engineering Department). Stormwater design is essential in reducing and controlling erosion, nonpoint source pollution, flooding and other drainage problems. The Stormwater Engineering Division has primary responsibilities for preventing pollution in natural creeks and streams of Knoxville and the adjacent portions of the Tennessee River.

1.1 Scope

The Land Development Manual does not contain the complete requirements for site development design and construction. Two other entities are also involved in the design review process. See Figure 2-1 for the overall review sequence of a typical large site development project.

+ The Metropolitan Planning Commission (MPC) is responsible for conceptual designs, property requirements, zoning regulations, platting issues, street names and addresses, traffic studies, etc. MPC is an independent agency that works with the City of Knoxville government and Knox County government in maintaining zoning ordinances and regulations. A broad description of the zoning powers granted to MPC is included in Section 4.2.

+ The Inspections Bureau (which is part of the Department of Development) addresses other elements of public health and safety (such as structural building codes and fire protection) through building permits, electrical permits, gas permits, mechanical permits, plumbing permits, and sign permits.

The scope of the Land Development Manual is limited to the requirements for submitting site plans and related projects to the City of Knoxville Engineering Department. The Knoxville Engineering Department is only one part of the City of Knoxville review process, as is explained further in Chapter 2 (Plans Review Process). State and federal agencies may have additional requirements other than those listed briefly under Chapter 5 (Permitting Requirements).

The Land Development Manual is not intended as a textbook or a comprehensive engineering design reference. Site plans, details, calculations, construction specifications and other technical documents must be designed and sealed by a professional engineer registered in the state of Tennessee, with sufficient knowledge and experience to accomplish all design elements of the site plan. Most types of engineering calculations are not explained or defined within the Land Development Manual, either due to the very complex nature of the subject matter or the fact that the design equations and methods are well-known to most competent practicing engineers who claim expertise in the area of land development.

In addition to technical design, submitted projects must also meet federal and state standards for health and safety. For instance, trenching and excavations must satisfy OSHA standards in 29 CFR 1926 Subpart P - Excavations. Scaffolding and temporary work platforms must also meet OSHA standards. Traffic signs must be designed to meet FHWA and AASHTO requirements. Consideration for public safety must be emphasized throughout the design process.

1.2 Authorization

The Knoxville Stormwater and Street Ordinance, effective in June 1997 and as further amended, provides the basis for much of the stormwater design criteria contained within this manual. The Knoxville / Knox County Minimum Subdivision Regulations provide most of the street design criteria. Other types of design procedures have been in effect for many years through policy mandates issued by the Engineering Director. City ordinances and regulations also impact project design; the most commonly referenced ordinances are included within Appendix B.

The City of Knoxville, like many other cities across the United States, is required to have a National Pollutant Discharge Elimination System (NPDES) permit to discharge stormwater from the municipal separate storm sewer system (MS4). This requirement comes from the Clean Water Act administered by EPA. Because development activities contribute to the discharge of pollutants, the NPDES permit requires that the City of Knoxville encourage, promote, and require implementation of certain practices and procedures for the purpose of reducing or limiting discharge of pollutants to stormwater channels. City ordinances and standards were developed and adopted specifically to address stormwater quality concerns. The Land Development Manual is an important element in the city's effort to improve residential and commercial design and construction practices. The principal ordinances and standards for the City of Knoxville that affect the selection of stormwater control measures are:

- NPDES Stormwater Discharge Permit No. TNS068055 (also called NPDES MS4 Permit), originally issued by TDEC Division of Water Pollution Control for the City of Knoxville and effective on July 1, 1996. This permit is renewable every 5 years by TDEC, and each new permit may contain stricter requirements for pollution control and stormwater monitoring due to changing federal laws, regulations and guidelines.
- Stormwater and Street Ordinance (Sections 22.5-1 through 22.5-54), initially issued on June 1997 and as further amended (Chapter 22.5 of the Knoxville City Code).
- Knoxville Best Management Practices (BMP) Manual, initially issued on January 2001 and as further amended.

1.3 Design Objectives

The overall intent of the Land Development Manual is to ensure that minimum requirements are met with respect to development and redevelopment activities. These minimum requirements shall be enforced in a fair and impartial manner, based upon sound engineering judgment and concerns for the public safety and welfare. A list of design objectives will include:

- Safe and functional design of roads, streets, driveways, and parking lots.
- Safe and functional design of sidewalks, walkways, trails and other pedestrian routes.
- Safe and functional design of curb and grate inlets, culverts, pipes and open channels.
- Minimize flooding, interruptions of utility service, traffic inconvenience and potential water damage to residences and businesses within the City of Knoxville.
- Minimize the amount of public expenditures needed for maintenance of streets and roads, flood control projects, flood relief efforts, and stormwater facility maintenance.
- Preservation of trees, woods, natural meadows and other green spaces as much as possible (in conjunction with allowable land uses and zoning codes).
- Protect and enhance streams, wetlands, waterways and rivers for wildlife and plants by reducing stormwater pollution, erosion, and negative stormwater impacts.
- Promote development of recreational facilities and design aesthetics along streams, waterways, wooded areas and other greenways to benefit local neighborhoods.

1.4 Engineering Design Accountability

The Land Development Manual contains information to assist in the design and layout of most projects. However, this manual does not replace or otherwise excuse the need for professional engineering judgment and knowledge. The user of this manual is hereby cautioned that many aspects of engineering design must be considered, including but not limited to:

- Public health and safety.
- Site-specific conditions or unusual features of project site that warrant special designs.
- Current versions of design texts, manuals, technical documents and research.

Most types of construction plans must be stamped and signed by a professional engineer actively licensed in the state of Tennessee. Site layout and grading plans may be stamped and signed by a professional landscape architect licensed in the state of Tennessee. The design professional must have sufficient education and experience to perform a complete and thorough design of each element shown on the construction plans, and he must also have complete control to change or alter plans during the design phase. The professional's stamp is a public guarantee that his design has the highest regard for health and safety, protects the environment (air, soil, water) to the maximum degree possible, and serves the interests of the general public within Knoxville.

The City of Knoxville requires a certain level of design expertise for stormwater calculations and flooding analyses. Stormwater design criteria are based upon current scientific knowledge and engineering judgment. It should be realized by engineering designers that floods and flooding may occur at any time due to any number of factors beyond the reasonable control of the city, such as: greater amounts of precipitation or different rainfall patterns than used in design storms, wet soil conditions, debris or blockage of key stormwater channels, high groundwater tables, etc.

1.5 Legal Aspects

If any portion of the Land Development Manual is ruled to be invalid or unconstitutional by any court with adequate jurisdiction over the City of Knoxville, then such portion shall be considered to have been selectively removed from this manual without affecting the manual's overall applicability and legal standing to the land development process. The Land Development Manual will be revised on a periodic basis to reflect known changes to laws and regulations.

All local, state and federal laws and regulations shall be considered when interpreting provisions within the Land Development Manual. In each instance, the more restrictive requirement shall govern unless sound engineering judgment can determine and prove that the more restrictive requirement would be otherwise unnecessary. In most instances, laws and regulations that are phrased more explicitly shall apply over those items that are not phrased as precisely.

1.6 Language and Interpretation of Text

The following language rules are applicable to the Land Development Manual:

A. The imperative case is always mandatory. The words "shall" and "must" are always mandatory. These actions must be performed unless sufficient engineering justification is submitted to city officials within the Stormwater Engineering Division and written approval has been specifically granted.

B. The word "should" indicates an action that is highly recommended under most conditions. The word "may" indicates an allowable action or choice that is usually beneficial in meeting the minimum city requirements.

C. Use of the singular or plural case of a noun will not affect the applicability of this manual, or any other law, regulation, or ordinance, unless the context of the sentence specifically indicates that the singular/plural case affects the intended use or function on a scientific or engineering basis. The use of a singular or plural noun does not necessarily indicate whether to design or construct a single unit or multiple units.

D. Any reference to the Director of Engineering shall also mean the duly authorized representatives, sections or employees under his supervision who have the delegated responsibility. Areas of delegated responsibility may include, but is not limited to: review and approval of plans, review and approval of survey plats, definition of standards or requirements, approval of special conditions, review and issuance of permits, inspections and field investigations, enforcement actions, issuing notices of violation, conduct of public meetings, etc.

E. Within the Land Development Manual, the term "Knoxville" or "City of Knoxville" shall refer to an official of the Stormwater Engineering Division (in the Engineering Department) with the appropriate responsibility and authority for the particular action or judgment.

F. The term "development" shall generally include changes or improvements to any property that has already been developed previously. In other words, this manual also applies to redevelopment, structural additions, paving, regrading, etc. The term "redevelopment", as used in the Knoxville Stormwater & Street Ordinance, specifically refers to the improvement by 50% of the assessed value of the lot, building and/or lot use.

G. The terms "property", "lot", "parcel" and "plot" are generally used interchangeably to refer to a single undivided portion of land that is either legally recorded in the Knox County property records, or is being proposed in good faith by well-prepared plan drawings for the purpose of

being legally recorded. In each instance, it is the responsibility of the property owner (or his agent) to see that property is legally recorded at the Knox County Register of Deeds.

H. The terms "building" and "structure" are used interchangeably throughout the Land Development Manual, even though there are differences in the definitions listed in the Knoxville Zoning Ordinance and in the Knoxville Flood Damage Prevention and Control Ordinance.

In general, all words in the Land Development Manual shall have the common dictionary meanings and definitions. In addition, Tables 15-1 and 15-2 will assist the reader in locating many technical definitions contained at other locations outside of the Land Development Manual (i.e., commonly used regulations and ordinances for site development).

Common abbreviations and acronyms are listed at the beginning of the Land Development Manual. In some instances, the abbreviation or acronym is only introduced once if in common usage; in other cases, the abbreviation or acronym is spelled out each time it is used.

Chapter 2
PLAN AND PLAT REVIEW PROCESS

2.1 Overall Sequence for Large Projects

The overall sequence of major development and redevelopment projects will generally follow the seven-step pattern shown in Figure 2-1. Very small projects, such as construction of a single residential house, may not need a concept plan or a rezoning application (Step 1). The plan review process is under the general control of three agencies, as a potential construction project becomes more specific in detail. At each step of the process, the principal agencies can answer questions and provide further guidance with a variety of information resources to assist the process. The start of any site development process is for the owner or his agent (developer, engineer, architect) to carefully read the zoning ordinance and zoning maps to discover the permissible land uses and any restrictions on the properties in question.

The Land Development Manual is mainly concerned with the portions of land development review under direct control of the Engineering Division which are shown as dashed boxes in Figure 2-1. The main type of regulation by the Stormwater Engineering Section is issuance of a site development permit after all design requirements have been met. No development, grading, excavation, trenching or other type of installation activity may occur at a project site if an approved site development permit is not obtained. The Knoxville Stormwater and Street Ordinance requires construction bonds to ensure constructed quality for public streets, sidewalks, drainage systems and detention basins. Construction bonds will be released when requirements for development certification are met.

Step 1: The Metropolitan Planning Commission (MPC) is responsible for comprehensive planning and property subdivision review in all of Knox County. MPC maintains a countywide zoning plan and separate zoning ordinances for the City of Knoxville and for Knox County. In addition, MPC provides expert guidance and recommendations to the Knoxville City Council and Knox County Commission. MPC reviews proposed zoning amendments, subdivision plans, conceptual plans, property plats, traffic impact studies, street names and addresses, and other documents that affect growth and development. MPC receives applications for zoning variances which are processed by the Knoxville Board of Zoning Appeals. See the MPC website at www.knoxmpc.org/ for procedures, resources, online versions of Knoxville Zoning Ordinance and Minimum Subdivision Regulations, scheduled monthly MPC meetings, etc.

Step 2: The Stormwater Engineering Section has the primary role in development projects to review grading plans for street design, stormwater design, detention and stormwater quality facilities, erosion control, pavement sections, etc. The Stormwater Engineering Section also inspects construction projects for conformance with the approved site plans and plats. The Stormwater Engineering Section is responsible for the public stormwater system, such as managing stormwater infrastructure, investigating flooding problems, monitoring stormwater quality, analyzing stormwater models, and maintenance of the city streetlight system. Other sections of the Knoxville Engineering Division (Civil Engineering and Traffic Engineering) are

responsible for the design of city streets & roads, sidewalks, greenways, traffic signals, etc. For more information, see the engineering website at www.knoxvilletn.gov/engineering/

For step 2 (outdoor grading & site construction), there are streamlined procedures if the public welfare is not at stake with regard to public streets, driveway entrances, rights-of-way, property easements, stormwater drainage, detention basins, etc. Many simple development projects (such as building additions) do not require any grading, earthmoving, street connections, alteration of stormwater drainage systems, an increase in impervious area, or any type of land use to indicate a potential degradation of stormwater runoff. For these types of projects, streamlined review procedures are handled by Plans Review & Inspections in the course of reviewing building plans.

Step 3: The Plans Review & Inspections Section is part of the Knoxville Operations & Engineering Department. The primary functions are to review building plans and utilities connections, inspect buildings and utilities, check plans for compliance with building codes, etc. The main type of control for Plans Review & Inspection is the issuance of a building permit. In addition, a certificate of occupancy must be issued prior to the use of any new or remodeled buildings. Plans Review & Inspections also works closely with codes enforcement inspectors and fire inspections. The Knoxville Board of Zoning Appeals (BZA) can hear matters involving the interpretation or variance of a construction code. Many forms and instructions for obtaining permits from Plans Review & Inspections are posted at www.knoxvilletn.gov/plansreview/.

Step 4: Final plats are submitted to MPC for a coordinated review by several agencies and eventual approval by MPC. The final plat will become the official property record and must be accurate and legally correct in every way. Each agency that reviews the final plat will sign a stamp placed on the plat for this purpose. The criteria for preparing a final plat are contained in Section 4 of the Knoxville / Knox County Minimum Subdivision Regulations. MPC sends a review copy of final plats to the Stormwater Engineering Section for checking conformance to the approved site plans as well as closure and accuracy requirements.

Step 5: Field inspections are conducted by the Stormwater Engineering Section and Plans Review & Inspections within their respective areas of responsibility. In both cases, construction quality will ensure public health and safety through building codes, proper utility inspections, traffic regulations and guidelines, adequate drainage, streetlights, etc. Construction quality is also inspected for any items that are accepted by the City of Knoxville, such as public streets, sidewalks, drainage systems, traffic signs and signals, streetlights, etc. Stormwater quality for creeks and streams, which is mandated by state and federal laws, is protected through the proper construction of detention basins, oil/water separators, or other stormwater quality structures.

Step 6: The Stormwater Engineering Section uses a development certification process in order to ensure that the constructed project meets the requirements of the approved plans and plats. A final site inspection is performed, all required material certifications are gathered, the detention basin is checked using the as-built configuration and outlet structure, easement locations are checked, and street geometry is checked. A final check of the as-built drawing with the recorded plat helps to ensure that official property documents are correct.

Step 7: Plans Review & Inspections conducts final inspection of all structures and buildings to ensure that all applicable building codes are met. Final utility inspections allow the safe use of electricity, natural gas and water within the constructed project. A certificate of occupancy is issued in order to allow structures and buildings to be used for the designated purposes.

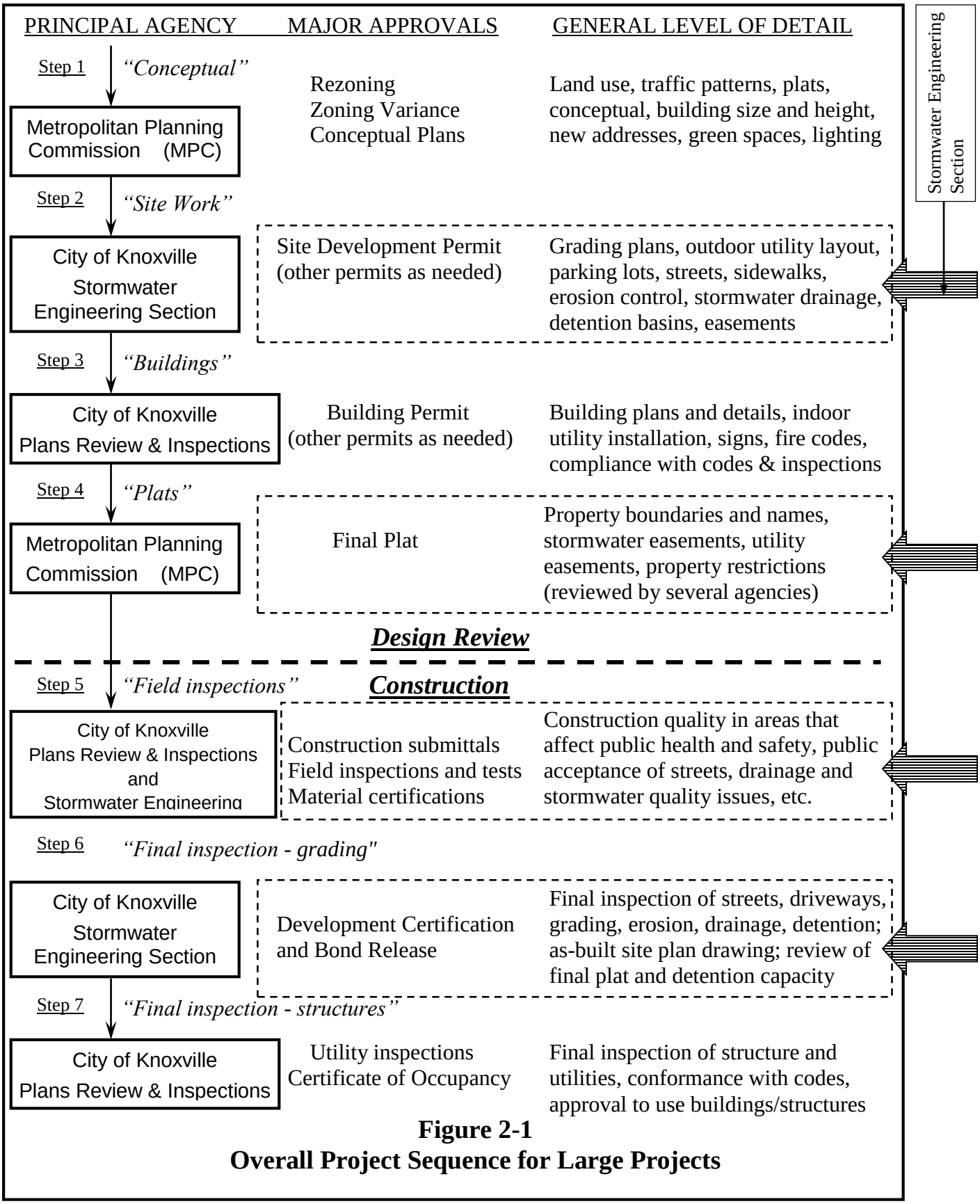

Figure 2-1
Overall Project Sequence for Large Projects

2.2 Site Development Permit Application

A site development permit may be obtained from either the Stormwater Engineering Section (Room 480, City County Building) or Knoxville Plans Review & Inspections (Room 505, City County Building) using the site development permit application and checklist in Appendix A. Obtain the permit from the Stormwater Engineering Section if either of these conditions apply:

- Grading is proposed, and there are no buildings or structures to be constructed. Typically these projects include parking lots, driveways and entrances, stormwater drainage improvements, street construction or other right-of-way improvements.
- A grading permit is desired prior to the final approval of a building permit. This allows outdoor portions of a project (grading, stormwater drainage installation, utilities, paving, parking lot, landscaping) to be constructed before the final design of a building is ready.

If there is only minimal grading and drainage construction required, the site development permit is typically obtained from Plans Review & Inspections in conjunction with the building permit. A site development permit application, if submitted to Plans Review & Inspections, is logged in electronically using the building permit application number as the reference number. The plans (with any supporting documents or calculations) are then routed to different reviewers. One copy of the plans, along with any supporting calculations, goes to the Stormwater Engineering Section for review of grading, stormwater drainage, erosion control, and detention basins. After all reviewers have reviewed the plans, Plans Review & Inspections will contact the appropriate party listed on the application with either approval/disapproval and a list of comments.

A site development permit application, when submitted to the Stormwater Engineering Section, is logged using a separate tracking system than Knoxville Plans Review & Inspections (which tracks all permits by cross-reference to a building permit application number). The plans are routed by the Stormwater Engineering Section to different reviewers. When review is complete, the Stormwater Engineering Section will fax/mail comments to the contact person listed.

A project must have an address assigned by MPC before site development plans can be accepted for review. Site development plans must meet the requirements of Chapter 7 and include a grading plan, erosion and sediment control plan, roadway alignment and profiles, construction details, etc. In addition to submitting the required number of site development plans and a site development permit application, other necessary information must also be included:

- Submittal review fees
- Stormwater calculations and detention calculations (if applicable)
- Retaining wall calculations (if applicable)
- Rezoning information or zoning variances (if applicable)
- Site development permit checklist (recommended but not required)

In some cases, a developer or engineer may wish to discuss a few aspects of a potential project prior to making an initial submittal. Contact the Stormwater Engineering Section front desk at 215-2148 to make an appointment with the plans reviewer or other city officials as needed. A predesign discussion may be performed as a courtesy to the design engineer, so that design efforts can be focused appropriately on a well-planned layout. However, a predesign discussion should be brief and to the point in order to conserve time and taxpayer dollars.

2.3 Site Development Flowcharts for Large Projects

In addition to the review process associated with the site development permit application, there are several other types of reviews and submittals that take place during and after the basic site development review. Figures 2-2 through 2-4 contain flowcharts of what happens after the site development permit application is reviewed and approved. This process typically takes much longer than the actual review of site plans, and may significantly affect the start of construction or the sale of a property. Therefore, it is extremely important that a potential developer must be familiar with the city review process and plan accordingly.

Figure 2-2:	Site Development Review	(stormwater covenant, construction bonds)
Figure 2-3:	Plat Submittal Review	(MPC, checking plats, recording plats)
Figure 2-4:	Construction Inspections	(types of inspections, bond release or extension)

Each of the flowcharts shows how a typical project is evaluated within the Stormwater Engineering Section after tentative site development approval has been obtained, with items shown as a diamond being the decision points. The top left portion of Figure 2-2 contains the basic plan review process. After the iterative review process is completed, the site plans are tentatively approved pending other actions.

Other documents (bonds, plats, covenants) are then prepared and reviewed for strict conformance with the approved plans. The remainder of Figure 2-2 shows the decision-making process in requiring construction bonds for street and/or drainage improvements. After the developer makes arrangements with a guarantor and provides the required information, a construction bond document (more correctly called a Performance and Indemnity Agreement) is prepared by the Stormwater Engineering Section secretary using a template as described in Policy 09 within Appendix C. In addition, a document called "Covenants for Permanent Maintenance of Stormwater Facilities" (CPMSF) is prepared by the Stormwater Engineering Section secretary for any detention basins and other stormwater quality structures using information provided by the property owner (see corresponding form in Appendix A) and the appropriate template (a basic template is included in Policy 02 within Appendix C).

Figure 2-3 deals primarily with the plat review process. This is coordinated by MPC and reviewed by several agencies, in order to ensure complete accuracy and legality. The Stormwater Engineering Section is responsible for looking at the surveying information and accuracy, in addition to agreement with the tentatively approved site plans. Plat review can be a long and arduous process if the plats are not prepared correctly. Final plats must conform to the Minimum Subdivision Regulations and must be approved by MPC before being recorded with the Knox County Register of Deeds.

Figure 2-4 gives an overview of the construction inspection process. Certain portions of the site development (street construction, sidewalks, stormwater drainage) must be inspected to ensure that the interests of the general public are protected. Construction of these items must be durable and low-maintenance. The method for reviewing and releasing construction bonds is also described.

Figure 2-2
Site Development Review
Stormwater Engineering Division

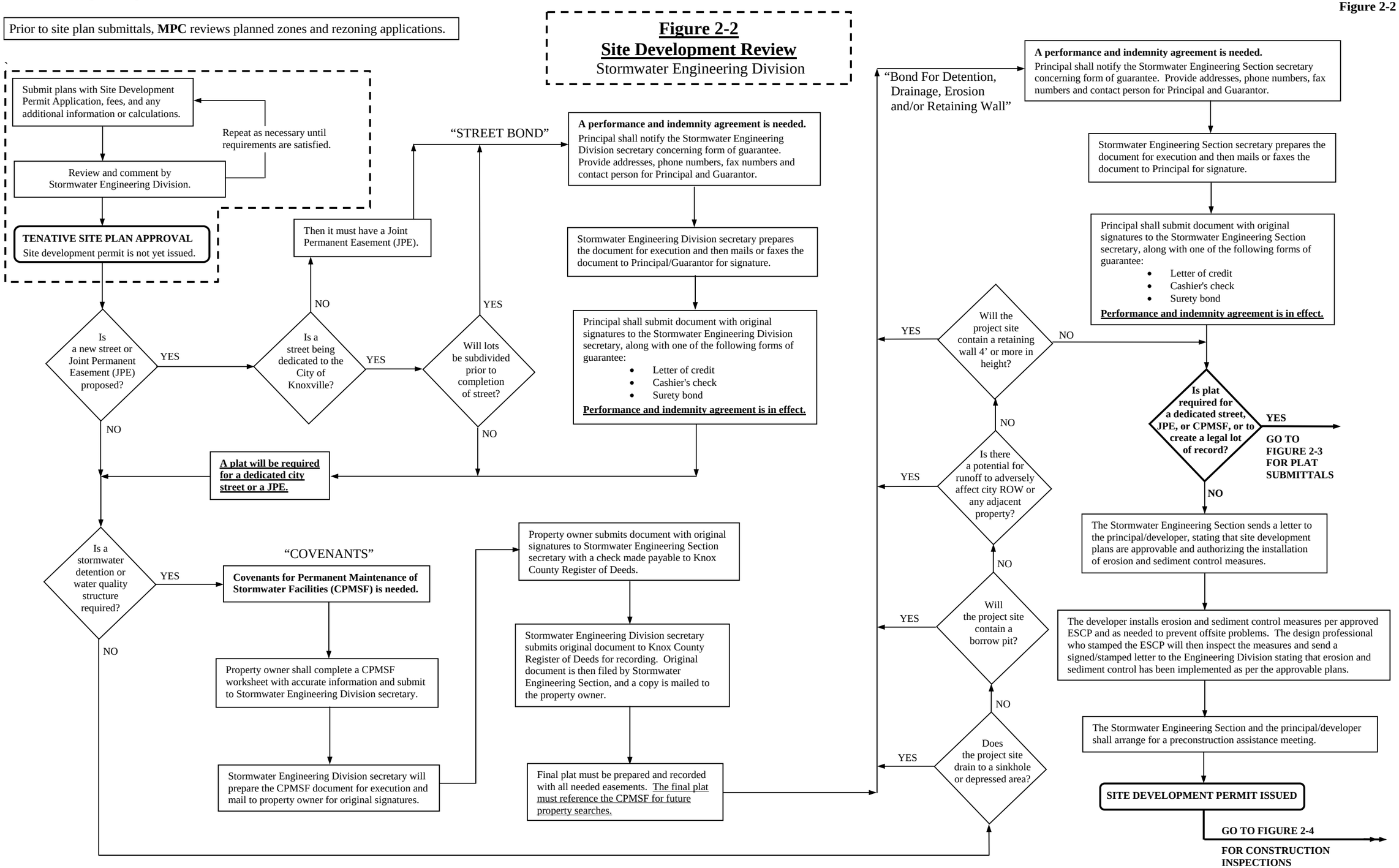

Figure 2-3
Plat Submittal Review
Stormwater Engineering Division

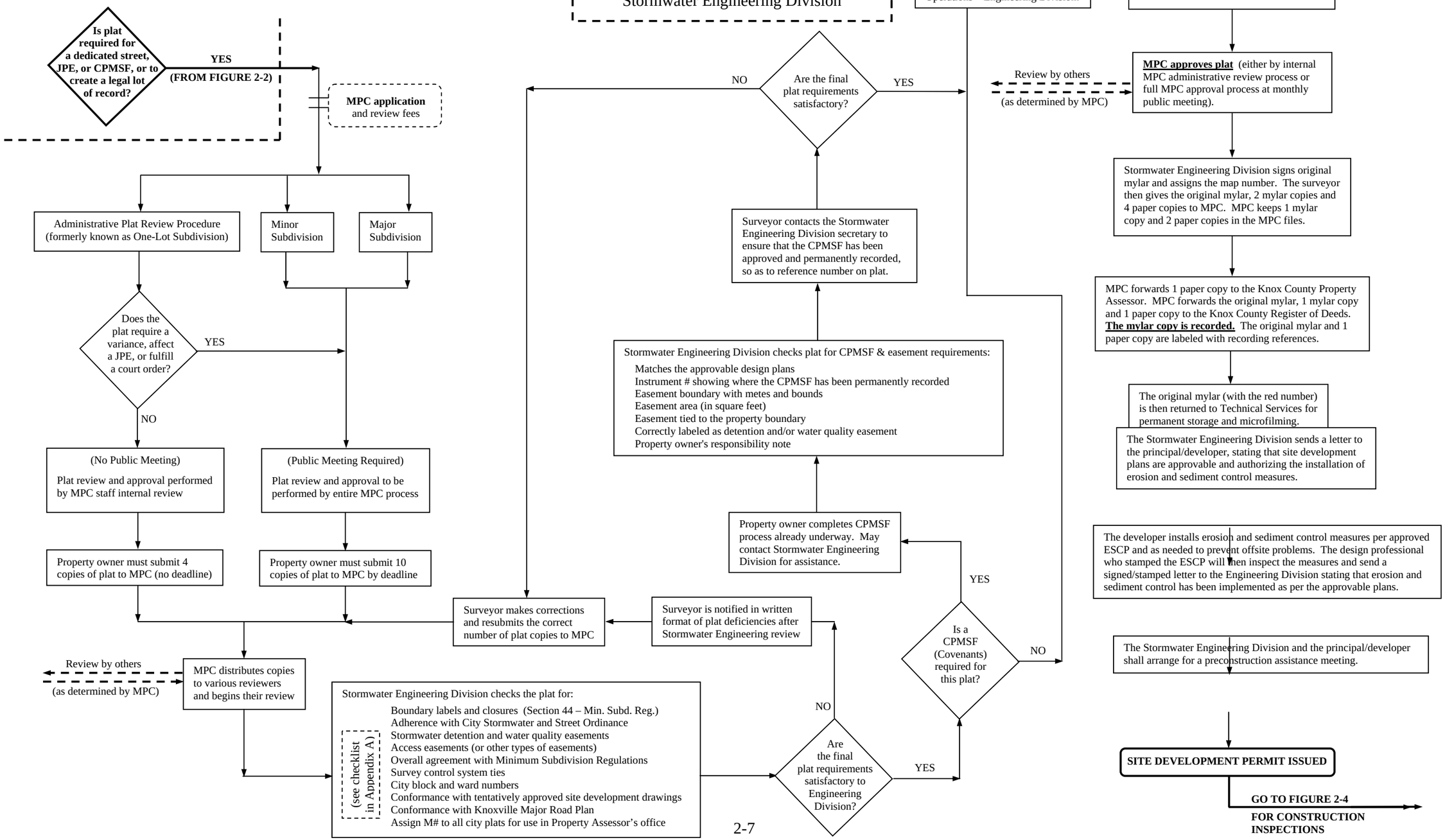

CITY OF KNOXVILLE

Figure 2-4
Construction Inspections
Stormwater Engineering Division

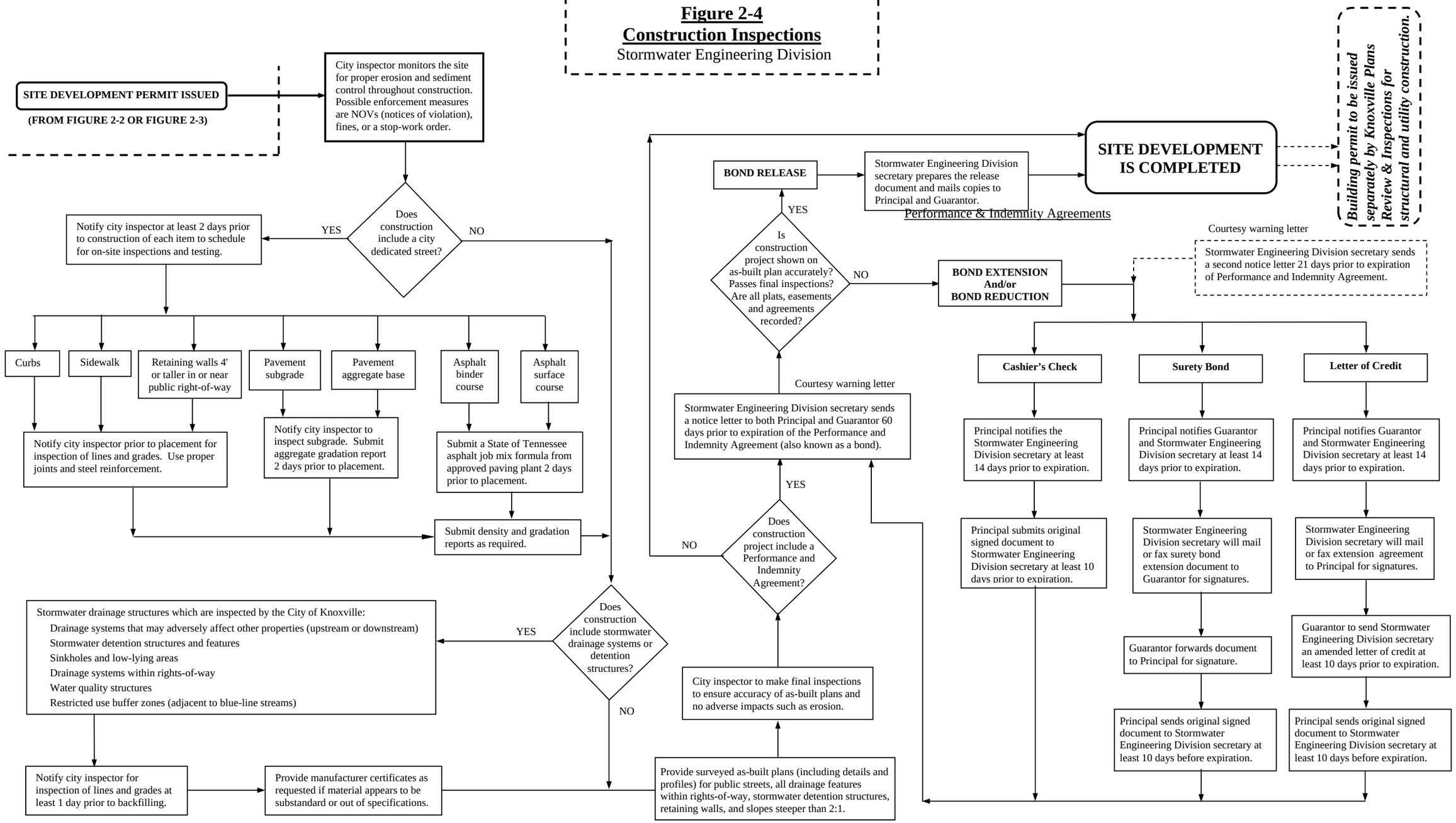

Chapter 3
AVAILABLE RESOURCES

3.1 Overview of Resources

There are many local resources that are available to assist in the design of land development projects. Some basic websites and design references are listed in Chapter 15. Many of these resources are also posted on websites, with the advantages of being free and convenient. Some resources (maps, manuals, etc.) may be purchased from government agencies at a nominal cost. Resources are grouped into the following broad categories, with examples in parentheses:

- Regulations (ordinances, policies, subdivision requirements)
- Physical data (topography, survey monuments, photographs)
- Design guidance (Knoxville BMP Manual, drainage design charts, standard details and specifications, AASHTO green book, MUTCD)

In addition to physical resources, the Stormwater Engineering Division can typically answer specific questions. See the Stormwater Engineering Division personnel chart, posted on the Engineering Department website, for a current list of telephone numbers and names. The most common points of contact during site design and construction are:

Plans review, design questions	*David McGinley*
Plat review, agreements, covenants	*Molly Hyatt* and *Ben Davidson*
Construction inspections and certifications	*Curtis Williams*
Bonds, performance agreements, covenants	*Susan Nelson*

The Stormwater Engineering Division has floodplain maps and profiles to determine if a development project is in a floodplain or other flood hazard area. The maps are revised and issued by the Federal Emergency Management Agency (FEMA). Paper maps can be ordered directly from FEMA, or the Stormwater Engineering Division can photocopy portions of particular maps as needed to assist developers.

3.2 Engineering Department Website

The City of Knoxville Engineering Department (including the Stormwater Engineering Division) maintains a website that includes the following items to assist with land development:

- Knoxville BMP Manual
- Stormwater and Street Ordinance
- Work Zone Traffic Control Policy
- City of Knoxville standard details
- City of Knoxville technical specifications

The Knoxville BMP Manual contains design guidance for stormwater channels, ditches, pipes, culverts, and stormwater detention structures, erosion control features, good housekeeping, etc. The Knoxville BMP Manual also has lists of useful websites and drainage reference documents.

3.3 Technical Services Counter

The Technical Services Counter (865-215-2103), part of the Stormwater Engineering Division, is located in Suite 462 of the City County Building. The counter maintains the official ward maps, subdivision plats and other records necessary to efficiently support the Stormwater Engineering Division and other parts of city government. The products for sale are nominally priced to help recover the production cost. The Geographic Information System (GIS) is a countywide system established jointly by the City of Knoxville, Knox County, and the Knoxville Utilities Board.

The following products are available from the Technical Services Counter for areas within the Knoxville city limits. Contact KGIS for maps and other products outside the city limits.

- Full-sheet (30” x 36”) copy of preprinted GIS topographic map at 1” = 200’ $10.00
- Half-sheet (24” x 36”) copy of preprinted GIS topographic map at 1” = 200’ $5.00
- Computer-generated plot (any scale) with GIS information on 11” x 17” paper $8.00
- Printed page from microfilm records on 11” x 17” paper
  $1.00
- Aperture camera cards and duplicards duplicates (per card)
  $1.00
- Special request map for GIS data on large plotter, with color printing $53.00

The current price list is maintained at the Technical Services Counter, along with examples of these products. The counter staff is very helpful in assisting homeowners or developers in choosing the best product for a particular purpose. The City of Knoxville maintains city survey control monuments to assist in surveying; this information is freely available to surveyors who need to know coordinates and elevations. See the interactive survey mapping website (hosted by KGIS and the Civil Engineering Division jointly) for more information at
http://www.knoxvilletn.gov/government/city_departments_offices/engineering/civil_engineering_division/survey_control_points/.

Other sources of maps, aerial photographs, historical records, plats, and other data include KGIS and MPC. KGIS is the lead agency for developing and maintaining the GIS database on a continual basis for various government entities and utility boards. Therefore, KGIS offers a wider variety of products and services, particularly for obtaining electronic data. See the MPC website for a further description of historical maps, census data, traffic counts, etc. MPC also assigns and revises street addresses early in the design and development process.

Knoxville / Knox County / KUB
Geographic Information Systems (KGIS)
606 Main Street, Suite 150
Knoxville TN 37902
Telephone (865) 215-2641

Metropolitan Planning Commission (MPC)
City County Building, Suite 403
Knoxville TN 37902
Telephone (865) 215-2500

Additional resources such as tax maps, property deeds, recorded plats and other types of property information are located on the 2nd floor of the City County Building. The Knox County Register of Deeds maintains the official property records for the City of Knoxville and surrounding areas.

Knox County Property Assessor
City County Building, Suite 204
Telephone (865) 215-2360

Knox County Register of Deeds
City County Building, Suite 225
Telephone (865) 215-2330

3.4 Metropolitan Planning Commission (MPC)

The MPC offices are located on the 4th floor of the City County Building (telephone 215-2500). MPC offers assistance and information to anyone who is involved in the development process through the following means:

- Development Services Counter (a staffed help desk on the 4th floor).
- A comprehensive website with requirements and services (www.knoxmpc.org).
- A library and records department which is open to the public.
- Many items for sale such as publications, maps, photographs, etc.

MPC maintains the official updated versions of critical development design documents on its website, such as the Zoning Ordinance and the Minimum Subdivision Regulations. These documents must be carefully reviewed by all concerned parties early in the conceptual design process. An error in understanding or interpreting these documents may result in rejected applications, design delays, additional fees or other unpleasant events. MPC regularly meets on the second Thursday of each month and is required to conduct all meetings publicly. Therefore, the website also has meeting schedules and a list of submittal dates necessary to be placed on the agenda. The website also has the list of MPC review fees and downloadable forms.

3.5 Knoxville Inspections Bureau

The website at http://www.knoxvilletn.gov/government/city_departments_offices/plans_review_inspections/ contains the basic procedures to apply for a building permit and an overview of the inspection process. In addition to the building permits, the Inspections Bureau also handles site development permits for most small projects with moderate grading and drainage work, in conjunction with building construction. The Inspections Bureau is located at Suite 505 of the City County Building (telephone 865-215-4520). Other permits such as electrical permits, gas permits, mechanical permits, plumbing permits and sign permits help to

protect the general public and are required before a building can be declared ready for occupancy. See Section 5.1 for further discussion of the Knoxville Inspections Bureau and the types of permits which are typically issued.

3.6 Tennessee State Board of Architectural and Engineering Examiners

A state website that contains many features is the State Board of Architectural and Engineering Examiners at http://www.tn.gov/commerce/section/architects-engineers. It has an on-line roster of registered professionals with current status and address, a list of laws and regulations with regard to the practice of architects and engineers, and a useful document called the Reference Manual for Building Officials and Design Professionals.
The state of Tennessee is authorized to license and regulate design engineers by authority of TCA Title 62, Chapter 2, which cites the state's interest in protecting life, health and property and to promote the public welfare. The rules of the State Board of Architectural and Engineering Examiners are also contained on this website. Minimum education and experience levels, renewal procedures, continuing education requirements, and rules of professional conduct are all addressed. The Reference Manual for Building Officials and Design Professionals addresses many questions with regard to site grading and development in addition to building construction.

3.7 Tennessee Department of Transportation (TDOT)

TDOT is the primary source of information in the state for good construction specifications, details, design parameters, and highway design/construction updates. TDOT Standard Specifications for Road and Bridge Construction is a helpful reference in terms of earthwork, street pavements, concrete, drainage structures, culverts, aggregates, incidental construction, and miscellaneous materials such as erosion control or seeding. This document can be viewed or downloaded at
www.tn.gov/tdot/topic/roadway-design-design-standards.
TDOT Standard Roadway and Structure Drawings contain over 300 standard details in the following categories: roadway design, culverts and endwalls, catch basins and endwalls, roadway and pavement appurtenances, safety appurtenances and fence, traffic control appurtenances, and erosion control and landscaping. Contact TDOT for further details on how to purchase this reference (approximately $100 for a complete set of TDOT standard details). These details may also be viewed or downloaded at
http://www.tn.gov/tdot/section/chief-engineer-design-standard-drawings-library

3.8 Federal Highway Administration (FHWA)

FHWA has design manuals for almost every aspect of drainage design and hydrology. Some of the manuals are available online at www.fhwa.dot.gov/engineering/hydraulics/library_listing.cfm. Three very useful manuals are Hydraulic Design of Highway Culverts (HDS-5), Hydraulic Design of Energy Dissipaters for Culverts and Channels (HEC-14), and Urban Drainage Design Manual (HEC-22).

FHWA also has the authoritative reference document for temporary and permanent traffic control. The Manual on Uniform Traffic Control Devices (MUTCD) has been recently revised (December 2000) and is now located at mutcd.fhwa.dot.gov/.

3.9 Knoxville/Knox County/KUB Geographic Information System (KGIS)

The KGIS website at www.kgis.org/ has a feature called KGIS Maps which allows viewing and printing of interactive maps to display property lines, property ownership, addresses, buildings, streets, zoning, city and county limits, political representatives, school zones, CLT numbers, parcel numbers, wards, districts, etc. The user can zoom in and out, print drawings to scale, and select which features are displayed. Additional features will be added to the interactive mapping from time to time.
The City survey control points website is jointly hosted by KGIS and the Civil Engineering Division at
www.knoxvilletn.gov/government/city_departments_offices/engineering/civil_engineering_division/survey_control_points/

Survey control points are established and maintained by the Civil Engineering Division. This website helps to locate and identify survey control points, print location maps, retrieve the survey information, and compute bearings & distances between any two survey control points. KGIS and the Civil Engineering Division will update the website as new survey control points are established throughout the City of Knoxville.

Chapter 4
PROPERTY REGULATIONS

4.1 Introduction

Property records within the City of Knoxville and Knox County are recorded and maintained by the Knox County Register of Deeds (2nd floor City County Building). Other offices also maintain valuable records related to property in the City of Knoxville. Those of particular importance include the Knox County Property Assessor's office (2nd floor, City County Building), the Metropolitan Planning Commission (4th floor, City County Building), and the City Engineering Department's Technical Services Section (4th floor, City County Building).

The Property Assessor's Office maintains property maps (usually referred to as CLT maps or tax maps) for the entire county. These maps reflect property boundaries as described in recorded deeds. The Metropolitan Planning Commission (MPC) administers the local subdivision regulations entitled *Knoxville-Knox County Minimum Subdivision Regulations*. MPC can provide copies of these regulations, the Major Road Plan, Zoning Maps, and other planning maps and documents. The City Engineering Department (Technical Services Section) maintains ward maps, survey plats, deeds, easements, state and local highway plans, storm drainage plans, site plans, site development permits, and other engineering-related information. Ward maps differ from tax maps because ward maps reflect property boundaries as shown on recorded surveys.

Most city and county agencies have access to a centralized and well-managed computer mapping tool called the Knoxville-Knox County-Knoxville Utilities Board Geographic Information System (KGIS). Basic topographic maps can be purchased at the Technical Services Section for a nominal fee. Specialized maps can be ordered through the KGIS offices.

Real property cannot be sold, conveyed, or otherwise encumbered in part, in lieu of the subdivision regulations. In addition to establishing new subdivided lots, land developers often must dedicate rights-of-way and certain kinds of easements. Typical property issues that occur during land development include:

- Dedication of utility easements
- Dedication of drainage and detention basin easements
- Dedication of access easements to property and certain facilities
- Dedication of road rights-of-way
- Abandonment of public road, streets, and alleys
- Abandonment of easements when no longer needed

There are many exceptions and many unusual cases when dealing with official land records, since standards, language, measurement units, utilities, and types of activities have been changing continuously for decades. Initial consideration in the preparation of plats is the research and depiction of all known land restrictions. When surveying property within the City of Knoxville,

the records available through the Technical Services Section of the City Engineering Department should be researched.

As a reminder, the words "property", "lot", "parcel" and "plot" may be used interchangeably to refer to a single undivided portion of land that is either legally recorded in the Knox County property records or is being proposed in good faith by well-prepared plan drawings. The following words, essential to understanding property regulations, are defined in either the Knoxville Zoning Ordinance or the Minimum Subdivision Regulations (as listed in Chapter 15):

alley	block	easement	lot
parcel	plat, final	Register of Deeds	right-of-way
street	subdivision	surveying	surveyor
utility	utility agency	zoning district	

4.2 Origin of Zoning Powers

The state of Tennessee grants powers to county and municipal governments to establish zoning regulations under TCA Title 13, Chapter 7. This law contains the overall procedures for forming zoning commissions and for zoning plans. In addition, it allows the creation of historic districts with specialized requirements. These zoning powers reside in a joint governmental body (Knox County plus the City of Knoxville) called the Metropolitan Planning Commission (MPC). In addition to maintaining zoning ordinances and regulations, MPC also maintains the Knoxville-Knox County Minimum Subdivision Regulations for the purpose of having a uniform set of design standards and submission requirements for subdivision plans. The following portion of the state regulations indicates the broad purposes of zoning, from TCA Title 13 (Public Planning and Housing) and Chapter 7 (Zoning). In addition, the following section of the Knoxville Zoning Ordinance indicates the stated purposes of zoning within Knoxville. See the following two websites for state regulations and MPC regulations:

http://www.tennesseeanytime.org/main/government/laws.html

http://www.knoxmpc.org/zoning/zonhome.htm

TCA Title 13, Chapter 7, Section 103. Purposes of zoning regulations.

> "Such regulations shall be designed and enacted for the purpose of promoting the health, safety, morals, convenience, order, prosperity and welfare of the present and future inhabitants of the state and of its counties, including, among other things, lessening congestion on the roads or reducing the wastes of excessive amount of roads; securing safety from fire and other dangers; promoting adequate light and air, including protecting and encouraging access to sunlight for solar energy systems; preventing, on the one hand, excessive concentrations of population and, on the other hand, excessive and wasteful scattering of population or settlement; promoting such distribution of population and such classification of land uses and distribution of land development and utilization as will tend to facilitate and conserve adequate provisions for transportation, water flowage, water supply, drainage, sanitation, educational opportunity, recreation, soil fertility, food supply and the protection of both urban and non-urban development."

[Acts 1935, ch. 33, § 3; C. Supp. 1950, § 10268.3; Acts 1979, ch. 259, § 8; T.C.A. (orig. ed.), § 13-403.]

Knoxville Zoning Ordinance, Article 1, Section 3, Purpose.

"WHEREAS, the Council of the City of Knoxville is empowered to regulate the use of land and buildings, the height of buildings, the size of open spaces, surrounding buildings and the density of population, and

WHEREAS, the Council of the City of Knoxville deems it necessary to exercise the power so granted in order to encourage the most appropriate use of land; to maintain and stabilize the value of property; to secure safety from fire, flood, panic, and other hazards; to prevent undue concentration of population; and to create a comprehensive and stable pattern of land uses upon which to plan for transportation, water supply, sewerage, schools, parks, public utilities, and other facilities; to promote the health, safety, morals, convenience, order, prosperity and welfare of the present and future inhabitants."

4.3 State Regulations for Land Surveyors

Work to locate and define property boundaries, topographic features, structures, and other improvements to land must be conducted under the direct supervision of a Registered Land Surveyor currently licensed to practice in the State of Tennessee. In Tennessee, land surveyors are licensed by the State Board of Examiners for Land Surveyors. The minimum statewide standards and many of the laws and regulations that govern the surveying profession can be found in a booklet prepared by the Board. It is entitled *"Tennessee Land Surveyors Laws and Regulations"*. Excerpts from this publication and other regulations affecting surveyors are listed below for quick reference. The full text can be downloaded from the following two websites:

http://www.tn.gov/commerce/topic/surveyor-rules-and-laws

http://share.tn.gov/sos/rules/0820/0820.htm

A. TCA Title 62 (Professions, Businesses and Trades), Chapter 18 (Land Surveyors)

Registration requirements, definitions, State Board of Examiners, rosters, requirements for education and experience, manner of testing, reciprocity, renewals, use of surveyor's seal, disciplinary actions, violations, right-of-entry, liability, notice to affected landowners, types of registration fees, etc.

B. TCA Title 66 (Property), Chapter 6 (Tennessee Coordinate System)

Official coordinate systems for the State of Tennessee adopted and defined (Tennessee Coordinate System of 1927 and Tennessee Coordinate System of 1983), U. S. Survey Foot, English-metric conversion factors, minimum proximity to horizontal control monuments.

C. TCA Title 66 (Property), miscellaneous chapters:

1. Section 66-11-102: Liens
2. Section 66-24-103: Conveyances of land
3. Section 66-24-113: Metropolitan identification map
4. Section 66-24-116: Filing and recording restrictions for maps, plats and surveys
5. Section 66-24-121: Name, address and license number of surveyor on instruments
6. Chapter 66-27: Horizontal property act (apartments, townhouses, common areas)

D. Rule 0820 (Rules of the Tennessee Board of Examiners for Land Surveyors)

Chapter 0820-3, Standards of Practice:

Definitions, nomenclature, abbreviations, accuracy of surveys, preparations of maps, computation of areas, types of surveys, requirements for property surveys, requirements for topographic surveys, requirements for GPS surveys, requirements for hydrographic surveys, marking property boundaries, terminology for descriptions, minimum accuracy of surveying instruments and apparatus.

Chapter 0820-4, Rules of Professional Conduct:

Proper conduct, protection of public safety and welfare, areas of competence, public statements, truthfulness, conflicts of interest, acceptance of work, misrepresentation of academic or professional experience, misconduct, use of seals and signatures, definition of personal supervision.

4.4 Subdivision Requirements

See the Knoxville-Knox County Minimum Subdivision Regulations for the requirements for the subdivision of land. Before being officially recorded at the Knox County Register of Deeds office, a final plat (informally called a subdivision plat) must be approved by the Metropolitan Planning Commission (MPC). Contact the MPC staff concerning submission requirements and deadlines for the consideration of Concept Plans and Final Plats at the MPC meetings. MPC at its monthly meeting (2nd Tuesday of each month) will review:

- Subdivision Concept Plans
- Final Plats based on an approved Concept Plan (also requires design plan approval by City Engineering Department and KUB)
- Final Plats for minor subdivisions (subdivision of less than 6 lots with no construction or dedication of a public street)
- Final Plats where a variance is requested from the Minimum Subdivision Regulations.

A final plat may be reviewed by MPC staff internally as an administrative plat if it meets one of the following conditions:

- Divides a tract of land into two lots, thereby creating only one new lot.
- Combines existing lots into no more than two lots.
- Adjusts the lot line or lines between two existing recorded lots.
- A plat is required to record an easement, and no additional information or subdivision of land is involved.
- A plat meets the requirements for an exempt or corrected plat

4.5 Easement and Right-Of-Way Dedications

Final plats must be submitted to MPC for complete approval before being recorded with the Knox County Register of Deeds; see the MPC front desk for additional information. Detailed plat requirements are given in the *Knoxville-Knox County Minimum Subdivision Regulations*. An approved and recorded final plat is the official instrument used to subdivide land and to locate, describe, dedicate, and reserve road rights-of-way and various types of easements. All existing and proposed easements, reservations, or other encumbrances must be shown and identified.

The Minimum Subdivision Regulations require standard utility and drainage easements to be dedicated along all roads and property lines, both exterior and interior. However, final plats must often dedicate easements related to engineering issues as well. These dedications must be approved by the City Engineering Department. Many of them involve facilities needed to control storm water runoff and to prevent unnecessary contamination of Knoxville public waters. The following is a list of some typical easements and standard names to be used on survey plats:

- Detention Basin Easement (for dry or wet detention basins)
- Retention Basin Easement (for retention or infiltration basins)
- Water Quality Facility Easement (for oil/water separators, sand filter units, etc.)
- Access Easement for Detention Basin (or Retention Basin, or Water Quality Facility)
- Drainage Easement (for pipes, culverts, streams, ditches, swales)
- Utility Easement (specify sanitary sewer, electrical, telephone, TV cable, gas, water, etc.)
- Wetlands Easement (for natural or manmade wetlands)
- Greenway Easement

When a final plat is prepared for official recording at the Knox County Register of Deeds, the abutting public streets must comply with the Major Road Plan (maintained by MPC). The Major Road establishes minimum right-of-way widths and other parameters for all streets and roads within the City of Knoxville and Knox County. The property owner must dedicate any additional right-of-way necessary to meet the requirements of the Major Road Plan. The property owner will be asked to dedicate additional right-of-way only on his side of the road centerline.

4.6 Engineering Plat Review

MPC relies on various other agencies, including the City Engineering Department, for review of certain issues and features. The diagram in Figure 2-3 shows the plat review process from the perspective of the Stormwater Engineering Division. The checklist in Appendix A is used during the review of each plat. If a site development plan is required, the plat will be compared to the approved site development plan for complete agreement. When the plat review is complete, a list of any corrections and deficiencies will be sent to the Registered Land Surveyor in responsible charge of the survey.

4.7 Right-Of-Way Closure

A developer or landowner may request that a right-of-way should be closed due to a street realignment, property consolidation, or other considerations. Getting a street or alley closure is a

slow and lengthy process, typically taking months, and is regulated by MPC on behalf of the city and state. MPC accepts applications for street and alley right-of-way closures, and then distributes copies to the City Fire Department, City Engineering Department, Knoxville Utilities Board, U.S. Post Office, and other organizations with a potential interest. Sometimes a right-of-way has not been used for many years, with no visible trace of any previous street or road. In rare cases, a right-of-way may even predate all types of local government, so that there is no record of right-of-way dedication.

Road rights-of-way are classified as either "open" or "closed", and are also classified as either public or private. A public right-of-way is "open" if it has been dedicated for public use, even if a roadway has never been built within it. A public right-of-way is said to be "closed" if the public (represented by City Council in Knoxville) has abandoned all rights to use it as an access route. Easements are normally reserved for any existing utilities when a right-of-way is closed.

Frequently, a public right-of-way closure will be subject to certain conditions before approval is granted. Within the City of Knoxville, public right-of-ways can be closed by City Council only. Outside the city limits, public rights-of-ways can be closed by Knox County Commission only. Neither body will normally approve a closure unless the closure has been thoroughly investigated and approved by MPC first. MPC relies on the Engineering Department and Law Department to research the old records for each right-of-way closure. Within the city, the City Recorder prepares and maintains an ordinance for each right-of-way closure; the ordinance documents City Council's official action, describes the extent of the closure, and stipulates any reservations or conditions.

When a public right-of-way is closed (abandoned), the property reverts to the legal owner of the underlying fee interest. Most interior subdivision roads revert to the abutting property owners on each side up to the centerline (half-and-half). Property recipients may seek to obtain a quitclaim deed from the City by filing an application and paying a fee to the City Law Department.

Closing a public right-of-way, and thus obtaining the enclosed property, can sometimes greatly benefit a proposed land development. Right-of-way closures must not create any landlocked properties, substandard lots, or otherwise negatively affect access issues for nearby property owners. Nevertheless, right-of-way closures can be beneficial to all parties in some instances, including the local government which no longer has to maintain a right-of-way that is not needed. As part of the right-of-way closure application, the developer must obtain approval signatures from all affected persons and landowners. Right-of-way closure must be sufficiently advertised at the proposed right-of-way closure site and before the MPC monthly meeting.

City ward maps are the primary source for information concerning street and alley rights-of-way within the City. The ward maps typically show which rights-of-way are closed and associated city ordinances that closed them. The ward maps may be viewed at the Technical Services Section (Room 462, City County Building, telephone 865-215-2103).

Chapter 5

PERMITTING REQUIREMENTS

5.1 City Permits

Permits are required by the City of Knoxville in order to ensure that proper standards are used in design and construction. Permits also allow city construction inspectors to monitor progress and to ensure quality in the final constructed project. See Chapter 1 for a list of the major design objectives of the Stormwater Engineering Division. There are mainly two city agencies from which city permits are obtained at different stages of the design and construction process: the Engineering Department (three engineering divisions) and the Department of Development (Inspections Bureau). For large projects, a site development permit may be obtained prior to a building permit, in order to allow for grading and other site work to begin prior to building construction.

The following list of permits are issued by the Stormwater Engineering Division (part of the Knoxville Engineering Department). See Appendix A for application forms and checklists for the various permits.

A. Site Development Permit

The site development permit is the principal permit that is issued by the Stormwater Engineering Division. An approved permit will allow the property owner to begin construction and grading on the project site, in accordance with the plans and specifications, for all improvements excepting the portion of work that requires a building permit. A permit application form and a submittal checklist are included in Appendix A. Some basic requirements of plan drawings and calculations are listed in Chapter 7. Construction details must be drawn and labeled to show all materials. The application form must be legible and factually correct. It is the responsibility of the applicant to thoroughly review and understand all city laws and regulations with regard to site development and property regulations when applying for city permits.

B. Construction Right-Of-Way Permit (compare to State Right-Of-Way Access Permit)

A *construction right-of-way permit* must be obtained from the City of Knoxville for any type of project that requires grading, tree trimming, clearing, excavation or construction within public right-of-way. The permit allows city construction inspectors to monitor potential traffic interruptions and to inspect any repair work or modifications to: curb and gutter, sidewalk, signs, stormwater drainage, pavement structure, utilities, etc. A construction ROW permit is needed from the Stormwater Engineering Division for installation of driveways or entrances. Civil Engineering Division issues construction ROW permits in accordance with the Utility Maintenance & Construction Policy (available on the Civil Engineering webpage).

Damage to any city property, including grading and vegetation, must be reported immediately and repaired by the contractor appropriately. Alternatively, monetary damages may instead be requested by the Engineering Department in lieu of repairs.

C. Floodplain Development Permit

Prior to issuance of a site development permit for a property located with the floodplain, the floodplain development permit application (shown in Appendix A) must be approved by the Stormwater Engineering Division. The form must be signed by the applicant to ensure that the FEMA elevation certificate (shown in Appendix A) will be completed by a professional engineer or land surveyor within the required deadline. Submit one copy of the elevation certificate to the Knoxville Inspections Bureau after construction is completed, within the allotted time as per instructions.

D. Special Pollution Abatement Permit

This permit (also called SPAP) is required for development or redevelopment projects based on the potential to impact stormwater runoff quality, unless a current NPDES discharge permit is in effect for this site. SPAP application forms and requirements are included in Chapter 7 of the Knoxville BMP Manual. The SPAP is typically issued for 5 years and must be renewed prior to expiration. Also, the SPAP must be updated continuously to reflect design changes and new information.

A typical list of permits that are issued by the Inspections Bureau (Knoxville Department of Development) includes:

- Building Permit
- Construction Right-Of-Way Permit
- Demolition Permit
- Gas Permit
- Mechanical Permit
- Plumbing Permit
- Electrical Permit
- Floodplain Development Permit *
- Sign Permit
- Site Development Permit *

* = This permit can be obtained from either the Inspections Bureau or from the Engineering Department.

The two principal permits for most basic projects are a Site Development Permit (often informally called a grading permit) and a Building Permit. A city right-of-way permit is also needed to make a connection to an existing street. All permit requirements are identical whether submitted to the Stormwater Engineering Division or the Inspections Bureau. Permit applications, instructions, checklists and other forms are included in Appendix A for permits typically issued by the Stormwater Engineering Division. Consult the website at http://www.knoxvilletn.gov/government/city_departments_offices/plans_review_inspections/ or

visit the Inspections Bureau front desk (Suite 505, City County Building) for information about Knoxville Inspections Bureau permits.
Site development permits are not required when either of the following conditions apply (as listed in Section 22.5-28 of the Knoxville Stormwater and Street Ordinance):

A. The developed area will be used for gardening or agricultural purposes only, and no erosion or sediment is expected due to the minor nature of site grading.

B. A special request is made to the Engineering Director, and the developed area does not affect the overall quantity or quality of stormwater runoff. There must not be any effect on drainage channels or drainage patterns, and there is no increase in the amount of impervious land surface or the amount of vehicular traffic.

5.2 State Permits

The State of Tennessee may require one or more permits prior to site development and actual project construction; only a few of the potential state permits are listed in this section. The principal state agencies with an interest in the site development process include:

Tennessee Department of Environment and Conservation (TDEC)
http://tn.gov/environment/section/permit-permits
Telephone 865-594-6035
(Environmental Assistance Center)
2700 Middlebrook Pike, Suite 220

Tennessee Department of Transportation (TDOT)
Telephone 865-594-9101 (east side of Knox County, at Strawberry Plains Pike)

The TDEC website contains a list of environmental permits (air, water, wastewater, natural resources, etc.) in addition to forms, instructions, contacts, and fee schedules. The most common TDEC permits for general site development in the Knoxville region are ARAP and NPDES.

The local TDOT office must review and approve new driveways and entrances to state highway routes prior to being constructed. Criteria that TDOT uses to evaluate entrances include: horizontal sight distance, vertical sight distance, roadside maintenance concerns, stormwater drainage impacts, and potential traffic patterns.

A. Aquatic Resource Alteration Permit (ARAP)

This permit is necessary for any alteration, modification or impact within or adjacent to waters of the state, which also includes wetlands and sinkholes. Waters of the state are normally defined as any blue-line stream shown on a USGS quadrangle map, or any point adjacent or downstream from the start of a blue-line stream shown on a USGS quadrangle map. State of Tennessee requires that an ARAP must be submitted and approved prior to any activity which could potentially damage or degrade waters of the state. See the TDEC permit website for more information. TDEC allows some activities with a minimum amount of paperwork, while other activities may require a substantial amount of planning and submission of an application fee.

An approved ARAP must be submitted to the Stormwater Engineering Division prior to the final approval of a Site Development Permit. This normally requires some foresight in

contacting TDEC and determining which type of ARAP is needed. For common types of aquatic impacts (such as less than 50' of minor bank stabilization), TDEC has streamlined procedures as described at the TDEC permit website. Often, there is some question about where a blue-line stream begins. The local TDEC office is considered to be the official arbitrator. A TDEC inspector can usually inspect a location within a few days of a request being made. Although some judgment is involved, there are objective guidelines that can be used to make a determination.

B. National Pollutant Discharge Elimination System (NPDES) Construction Permit

NPDES permits are required by the U.S. Environmental Protection Agency, but are administered within this state by TDEC. However, the City of Knoxville has been approved by TDEC to be a Quality Local Program (QLP) and administer construction permits within the City. A construction permit is necessary for all construction activity that involves the grubbing, clearing, grading or excavation of 1 acre or more. Even if the construction activity is less than 1 acre, a NPDES construction permit is still required if the overall project development site includes over 1 acre. The applicant must fill out a Notice of Intent (NOI) form and also submit a Stormwater Pollution Prevention Plan (SWPPP). Application fees typically range from $250 up to $7500, depending on the amount of acreage developed.

C. National Pollutant Discharge Elimination System (NPDES) Industrial Permit

In addition to normal construction activities, NPDES permits may be needed for many types of industrial and commercial activities. See the TDEC permit website for more information. The NPDES program (authorized by U.S. Environmental Protection Agency) is administered within this state by TDEC. The design and construction of an industrial site will be greatly influenced by whether NPDES industrial permits are necessary. Most types of construction additions or redevelopment projects will affect an existing NPDES permit and should be closely coordinated and monitored.

D. State Right-of-Way Access Permit

For any state highway route, TDOT requires that a new driveway or parking lot entrance must be reviewed and permitted. The procedure for any site development plans is to bring 8 copies of the plan drawing to the Stormwater Engineering Division. The 8 copies will be stamped "Access Only", and then the applicant must take the 8 copies to the TDOT offices at Strawberry Plains Pike for review. After TDOT reviews and approves the driveway permit, bring 1 copy of the "Access Only" plan drawing back to the Stormwater Engineering Division.

5.3 Federal Permits

The United States government may also require permits prior to site development and actual project construction. The two most common types of federal permits (listed below) are concerned with potential impacts or alterations to creeks, streams, lakes, wetlands and other waters of the state. The USACE has special emphasis on navigable waters. A blue-line stream is defined as any stream or channel on a USGS quadrangle map, which is downstream from any point where the blue-line map legend is used. This definition may also include lakes, ponds, wetlands or other depressions that are adjacent to a blue-line stream.

A. Section 26A Permit for TVA creeks and tributaries (Tennessee Valley Authority)

B. Section 404 Permit for USACE blue-line streams (U.S. Army Corps of Engineers)

For the Knoxville area, TVA and USACE have a combined application form that can be found at the Nashville website (http://www.lrn.usace.army.mil/) along with instructions for preparing vicinity drawings, plan drawings, elevation drawings and details. The instructions include essential elements for each type of drawing and a standard drawing format. Contact TVA and USACE for additional information concerning the need for a federal permit:

Tennessee Valley Authority (TVA)
Suite 300
804 Highway 321 North
Lenoir City TN 37771-6440
Telephone: 865-988-2420

U.S. Army Corps of Engineers (USACE)
Eastern Regulatory Field Office
P.O. Box 465
Lenoir City TN 37771-0465
Telephone: 865-986-2961

In general, TVA and USACE will judge a permit by evaluating the probable benefits and impacts. In some cases, a project can be approved if the design or construction is modified to be environmentally responsible as recommended by the government experts. The following factors may be considered:

- Aesthetics
- Conservation
- Economics
- Flooding hazards
- Floodplain effects
- Navigation
- Public safety
- Recreation
- Rights of private ownership
- Shore erosion and accretion
- Water quality
- Water supply

After receiving an approved federal permit from either TVA or USACE (or both), the applicant should bring one copy of the approved permit package to the Stormwater Engineering Division before final approval and issuance of the site development permit can be granted.

Chapter 6

SMALL SINGLE FAMILY RESIDENTIAL DEVELOPMENT

6.1 Overview of SSFR

Small Single Family Residential (SSFR) development is defined as the development of a single recorded residential lot (single-family house or duplex unit) with less than 10,000 square feet of disturbed area. The entire property is assumed to be disturbed until a site plan is submitted to indicate differently. The site plan must be submitted on a topographic map with 2-foot contours (such as the computer-generated maps available from the Technical Services Counter, Chapter 3), but the topographic requirements are not as rigorous as other types of site development.

The site plan is not required to be stamped by a design professional, unless additional information is specifically required due to unusual circumstances, such as complicated stormwater drainage structures or retaining walls over 4' high. A formal erosion and sediment control plan is not needed, although adequate erosion control measures must be used to ensure that no sediment leaves the property. A stormwater detention basin is not required unless there are known drainage problems in the immediate downstream vicinity and it is determined by the Stormwater Engineering Division that a detention basin is the only feasible solution. The presence of a sinkhole or drainage problems may require a drainage study by a professional engineer. In general, residential development does not require a construction bond. However, a construction bond may be required for steep sites with known erosion or drainage problems.

In many cases, the property owner or developer does not want to perform any site grading, utility work, clearing of vegetation, driveway work, or other improvements prior to starting the actual house construction. If this is the case, then a Site Development Permit can be obtained as part of the process of getting a Building Permit from the Inspections Bureau (Suite 505, City County Building). The Inspections Bureau can serve as a "one-stop shop" for the various permits and inspections for Small Single Family Residential projects.

6.2 Plan Submittal Requirements

A typical SSFR site development plan, without unusual grading or drainage problems, will consist of the following steps:

1. Obtain a topographic map at a suitable scale from the Technical Services Counter (4th floor City County Building) or from the Engineering Department directly. Carefully draw the location footprint of any proposed structures (house, garage, shed, driveway). Indicate areas where existing trees and vegetation will be cleared. Show areas where utilities will be located, and whether excavation is necessary to construct a basement. Indicate locations on the site where the ground elevation will change (as either cut or fill). This map will serve as the site plan.

2. Fill out the top half of the Site Development Permit Application (Form A). The bottom half of the form is for larger projects; most of these items do not necessarily apply to SSFR development. The principal exception is for floodplains and stream buffer zones, which will be determined by the city plans reviewer based on FEMA maps and profiles during review.
3. Submit topographic map and the permit application to the 4th floor of the City County Building. In most cases, the city plans reviewer will check the permit application as you wait. Erosion control measures (silt fence, construction entrance, straw bale) will be added to the topographic map if warranted. The city plans reviewer will conduct a quick check for nearby drainage problems, sinkholes, floodplains and stream buffer zones. A site development permit fee of $10 will be charged for SSFR development.
4. If the property is located within or next to a floodplain, then the applicant must obtain a Floodplain Development Permit (Form H). This permit is free, and merely gives information about the required minimum floor elevations. The applicant is required to obtain a Flood Elevation Certificate (Form N), with surveyed floor elevations, soon after the structure has been built.
5. If any construction occurs within the public right-of-way, then another permit is also needed. A Construction Right-Of-Way Permit (Form I) can be obtained from the Inspections Bureau (5th floor City County Building). The applicant will specify the type of driveway, sidewalk, and utilities involved during construction. A fee will be computed based on any disturbance to public property within the right-of-way.

6.3 Typical Concerns

The following items are the most frequently observed problems with SSFR site plans.

A. Fixed structures may not be constructed within public right-of-way, since these structures may pose a hazard to the driving public. This includes: retaining walls, fences, signs, sign posts, playground equipment, etc.

B. Brick or masonry mailboxes may not be placed within public right-of-way. Only wooden 4”x4” posts or other “breakaway” designs may be used for mailboxes located within public right-of-way. Brick mailboxes are a safety hazard if located within 10 feet of the street pavement.

C. The City of Knoxville requires that driveway aprons and driveway connections must be paved within the public right-of-way line. Gravel driveways that “wash out” into the street are unacceptable.

D. Stormwater drainage channels (such as ditches, swales or ravines) should be stabilized using grass sod or check dams as soon as possible. Filter all stormwater that leaves the project site using silt fence or straw bales.

E. The City of Knoxville does not allow open burning, unless a special exemption has been obtained in advance from the Knoxville Fire Department. Therefore, trees and vegetation can either be taken to a waste transfer station or landfill, or can be chipped on site to use as mulch.

Chapter 7
LARGE RESIDENTIAL AND COMMERCIAL DEVELOPMENT

7.1 Overview of LRCD

Large Residential and Commercial Development (LRCD) is defined as any development that is not specifically Small Single Family Residential (SSFR) development as discussed in Chapter 6. This includes all commercial, office, industrial, multiple single-family lots, or any type of non-residential use. LRCD also includes single residential lots with a disturbed area of 10,000 square feet or more.

A subset of the LRCD category is Condominium Development, which is defined as a development of attached or detached units where the individual units take access from a private drive that is neither a joint permanent easement nor City right-of-way. The fee structure for Condominium Development (includes condominiums, townhouses and apartments) is different for plans review and issuing site development permits; otherwise, the same site development requirements apply.

The plans review fee for Site Development Plans includes the initial submittal and two resubmittals. Beginning with the third resubmittal, an additional plans review fee of $100.00 is charged for every resubmittal.

7.2 City Regulations

Plan submittals must meet the requirements contained in City ordinances and the requirements of the Engineering Department (such as the policies in Appendix C). The City of Knoxville is governed by a City Council with power to enact and approve city ordinances. The city charter and the various city ordinances may be viewed and printed from the city website (http://www.cityofknoxville.org) using the drop-down menu. Many city ordinances affect buildings and structures, and thus should be reviewed carefully during design to ensure that all structural requirements will be satisfied. However, for the purposes of obtaining a site development permit, the principal ordinances of interest are:

Chapter 12	-	Knoxville Flood Damage Prevention and Control Ordinance
Chapter 14	-	Knoxville Tree Protection Ordinance
Chapter 22.5	-	Knoxville Stormwater and Street Ordinance
Chapter 23	-	Knoxville Streets and Sidewalk Ordinance

The commonly referenced city ordinances named above (in terms of grading layout and site development) are included in Appendix B for easy reference. The right of interpretation and clarification of the ordinances is retained by the City of Knoxville in all instances.

The Engineering Department has issued policies from time to time in order to clarify design and construction requirements under its control. Some engineering policies have been in effect for many years, and are thus well-known to engineers and developers who have submitted plans on a regular basis. Other engineering policies were created to provide more detail for the requirements

listed in the Knoxville Stormwater and Street Ordinance. See Appendix C for the current engineering policies which are now incorporated into the Land Development Manual.

7.3 Site Development Plan

A detailed site development plan is required for all types of LRCD site development. The level of detail required for a site development plan depends principally on these factors:

- Size and complexity of the site development project.
- Safety concerns (slopes, excavations, retaining walls, traffic flow, potential flooding).
- Whether any of the facilities (such as public streets, drainage pipes on public land, or streetlights) will be maintained by the City of Knoxville.
- Potential for the project to impact neighboring properties or public right-of-way during construction.
- Potential for the project to impact drainage, flooding levels, or water quality on neighboring properties or public right-of-way

Site development plans must be stamped and signed by a professional engineer, professional architect, or professional landscape architect actively licensed in the state of Tennessee. The registered design professional must have sufficient education and experience to perform a complete design of each element on the construction plans. A professional designer's stamp is a public guarantee that his design has the highest regard for public health and safety, while protecting the environment (air, soil, water) to the maximum extent possible. If the site plan contains drainage structures or elements (such as pipes, ditches, swales, catch basins, detention basins, etc.) which require drainage computations, then the site plan must be designed and stamped by a professional engineer actively licensed in the state of Tennessee.

A site development permit application form is included in Appendix A, along with a checklist of common design elements. Profile drawings are necessary to construct public streets, and are highly useful in properly constructing driveways and entrances. Profiles are also beneficial for complex drainage systems in order to reduce the potential for utility conflicts. Construction details must be drawn and labeled to show all materials used; nontypical construction methods should be clearly shown.

The specific elements of a site development plan are mandated by Section 22.5-28 of the Knoxville Stormwater and Street Ordinance. The following list is a summary of the <u>minimum</u> standards for a site development plan:

- Name, address and telephone of all persons with a legal interest in the affected properties.
- Tax map number, group, and parcel number of the affected properties.
- Existing 2-foot contours (extending beyond the property limits).
- Proposed 2-foot contours (especially on roadways, parking lots, cut and fill slopes).
- Building pad elevations and dimensions.
- Size, material, location and invert of stormwater drainage pipes and structures.
- Size, location, side slope, bottom slope and outlet structure data for detention basins.

- Spillway size and elevation for detention basins.
- Size, slope and type of surface for drainage swales and ditches.
- Roadway profiles and cross sections (clear zones, utility strip, greenway, cross slopes).
- Signage plan (location and type of basic regulatory traffic signs, using MUTCD).
- Streetlighting plan for subdivisions (indicate the type of pole and lighting fixture).
- Designed and stamped by a professional engineer, professional architect, or professional landscape architect actively licensed in the state of Tennessee. If the site plan contains drainage structures or elements (such as pipes, ditches, swales, catch basins, detention basins, etc.) which require drainage computations, then the site plan must be designed and stamped by a professional engineer actively licensed in the state of Tennessee.

If a drawing is crowded with technical design information, some required elements of a site plan may be shown on a grading plan or drainage plan. In order to facilitate city review, any additional plan drawings that contain site development elements must be drawn at the same scale and north orientation as the site development plan. Basic information for each drawing includes:

- Standardized title block with project name and location, design firm, engineer, drafter, design date, unique drawing number, revision number, etc.
- Stamp of a professional engineer, professional architect, or professional landscape architect, signed and dated per requirements of Tennessee State Board of Architectural and Engineering Examiners, to certify design of all elements within scope of professional.
- North arrow for any plan views on the drawing.
- Scale for any plan views, cross sections, details or other graphic shown on the drawing.
- Uniform use of line weights and patterns, fonts, drawing styles, symbols and terms.
- A standard location on the drawing for either general notes or specific notes (as needed).

The final plat (prepared by a registered land surveyor actively licensed in the state of Tennessee) should agree with the approved site development plans. The site designer should work closely with the final plat preparer to incorporate all changes during the design review process.

7.4 Erosion and Sediment Control Plan

A detailed erosion and sediment control plan (ESCP) is required for all types of LRCD site development. The ESCP must comply with the requirements of the current Knoxville BMP Manual and the most current version of the Tennessee Erosion and Sediment Control Handbook. The ESCP must be designed and stamped by a design professional (engineer, architect, landscape architect) actively licensed in the state of Tennessee.

A typical checklist for preparing an ESCP is in Chapter 5 of the Knoxville BMP Manual. The critical elements that must be considered are: minimizing disturbed areas, controlling the site perimeter, reducing transport of sediment, protecting entrances to drainage structures, safely conveying offsite drainage, and routine inspection and maintenance. The specific elements of an ESCP are summarized below:

- Narrative: project description, existing site conditions, adjacent properties, types of

critical areas, construction schedule, phasing of BMP installation, inspection and maintenance of BMPs, drainage patterns, proposed ground covers, supporting calculations, expected BMP duration and replacement.

- Site Plan: vicinity map, existing vegetation and trees, limits of clearing and grading, existing contours, proposed contours, buildings, roads, parking lots, access routes, borrow areas, drainage structures, drainage patterns and watersheds, easements, critical areas, placement of BMPs, details.

The ESCP must indicate the general methods of placing BMPs as construction progresses. Prior to the issuance of the site development permit, the erosion control measures will be inspected in the field and approved by a design professional registered in the State of Tennessee (preferably the same design professional who stamped the ESCP). The design professional will send a signed and stamped letter to the Engineering Department stating that erosion and sediment control has been implemented per the approved ESCP.

7.5 Landscaping Plan

A landscaping plan must be submitted that shows proposed vegetation, trees, grass, shrubs, and other types of ground cover. A landscaping plan is usually submitted as a separate drawing at the same scale and orientation as the site development plan, but may also be shown on the site development plan as space permits. A major purpose of the landscaping plan (or alternatively called a vegetation plan) is to demonstrate compliance with the Knoxville Tree Protection Ordinance and other city regulations. There are additional restrictions on cutting, pruning, removing or replacing trees on municipal property and public land. See the following locations of the Knoxville BMP Manual:

- AM-03 Preservation of existing trees; tree wells
- Table AM-03-1 Knoxville Tree Protection Ordinance; tree location requirements
- ES-08, ES-09 Contains information with regard to seeding and sodding
- ES-10 Tree/shrub planting details, list of suggested tree species by size

A very brief summary of the tree protection and replacement requirements from the Knoxville Tree Protection Ordinance (in Section 14-34) is:

- A developer can choose to save a minimum of 6 trees per acre, in a manner that ensures survival of a healthy tree. Replacement trees, if necessary, shall be at the rate of 8 trees per acre, with at least one-half of trees selected from Group I (exceeding 50' in height).
- A developer can choose to plant a minimum of 8 trees per acre, at a spacing that ensures tree survival and room for maximum growth for tree maturity. All trees must be selected from the list in Table ES-10-1 of the Knoxville BMP Manual, with at least one-half of trees selected from Group I (exceeding 50' in height).

The Knoxville Tree Protection Ordinance (in Section 14-28) defines an existing tree as being at least 6" diameter when measured at a distance of 12" above the ground surface (or at least 3" diameter for certain horticultural or ornamental trees). Replacement trees (in Section 14-36) are

required to be at least 2" diameter when measured at a distance of 6" above the ground surface (or at least 1.25" diameter for certain ornamental trees).

The Knoxville Zoning Ordinance (Article 5, Section 6) has minimum requirements for allowing adequate sight distance on public streets and sidewalks. This takes the form of defining a Visibility Triangle (also shown in Chapter 12), which represents the minimum sight distance at corner lots. These requirements also apply to planting trees, shrubs, hedges, and flowers, in addition to walls, fences, signs and other structures. It is recommended that these guidelines should also be used for private driveways, vehicle entrances, private streets, parking lots and sidewalks on private property.

A plan drawing for the purpose of showing trees must contain the following minimum information:

1. Project title, address, name of owner, date, north arrow and scale.
2. Boundary lines of site with the location of trees to be either removed or retained (according to the type of permit).

When a grading permit or construction right-of-way permit is required, then the site plan shall generally locate groups of existing trees and their predominate species in those areas to be cleared. When a building permit, preliminary subdivision plan, or use on review development plan is required, the site plan shall locate and label existing trees to be retained or proposed trees to be provided. Typical tree locations and labeling are shown in Figure 7-1.

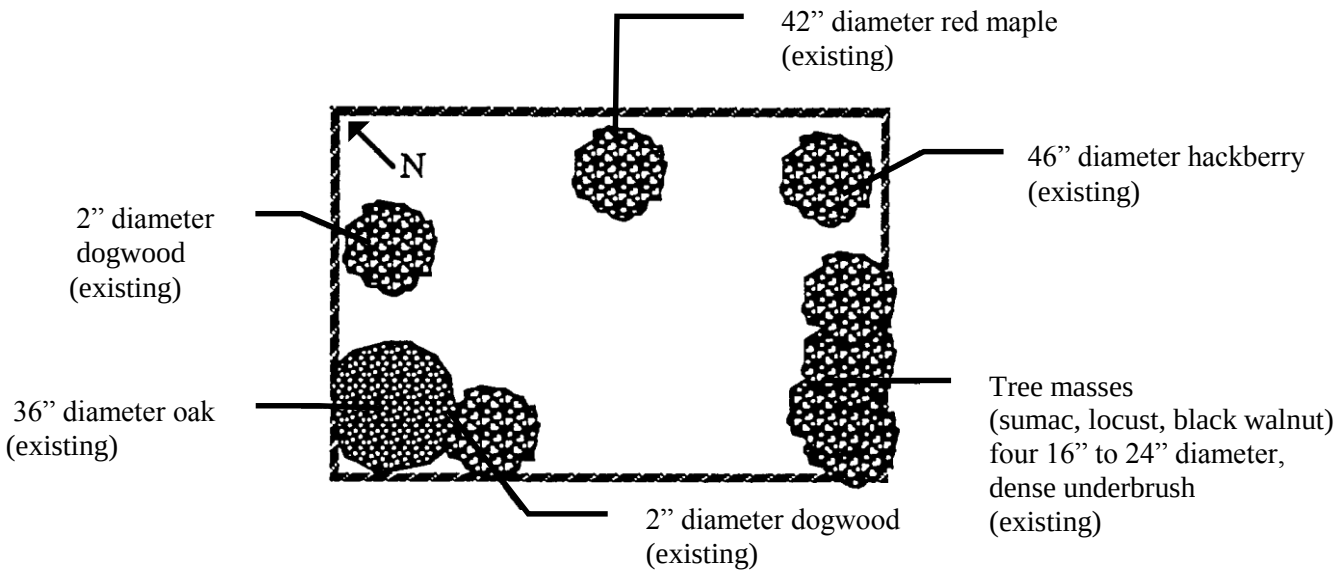

Figure 7-1
Tree Location Requirements on Drawings

7.6 Work Zone Traffic Control Plan

The requirements for a work zone traffic control plan are included on the Civil Engineering Division website. The necessity of having adequate traffic control when working adjacent to or within streets can not be overemphasized. In general, the Manual on Uniform Traffic Control Devices (MUTCD) is the principal technical reference needed to prepare a work zone traffic control plan. The most recent version of the MUTCD can be downloaded at the FHWA website (http://mutcd.fhwa.dot.gov/). Typical design elements include: traffic signs, pavement markings, construction scheduling, temporary devices for delineation or channelization, street lighting, and traffic regulations. Projects which contain lane closures, street closures, street cuts for utility installation, or very busy traffic locations near main arteries are of particular interest.

The work zone traffic control plan must be submitted to the Stormwater Engineering Division along with the site development permit. After being checked by the Stormwater Engineering Division, it is then reviewed by the Knoxville Civil Engineering Division using the guidelines from the Work Zone Traffic Control Policy. The Work Zone Traffic Control Policy contains a list of telephone numbers and contacts for coordinating a work zone traffic control plan with Knox County E-911, Knoxville Police Department, Knoxville Fire Department, and other agencies. It also contains a list of arterial streets and collector streets. Street cuts are allowed only if a Construction Right-Of-Way Permit (or also called a street cut permit) is approved and issued by the Civil Engineering Division in advance.

7.7 Roadway Plan

A complete set of roadway plans must be submitted and approved, if the site development project includes a street that will be publicly dedicated to the City of Knoxville. In addition, any reconstruction or realignment of a city street or road must include a complete set of roadway plans for the affected portions of the street right-of-way. See Section 22.5-35 of the Stormwater and Street Ordinance (within Appendix B) for additional information for the public acceptance of constructed streets. See Chapter 12 for additional information concerning street design criteria. The roadway plans must be designed and stamped by a professional engineer actively licensed in the state of Tennessee.

In addition to scaled plan drawings that depict horizontal geometry, the roadway plans must include profiles, grades, and cross sections that depict cross slope, materials used in construction, clear zone, location of utilities, pedestrian/greenway routes, etc. Horizontal and vertical geometry must be described completely using standard TDOT terminology and formulas. Construction methods and materials must agree with City of Knoxville Technical Specifications (available on the Civil Engineering Division website) and the current version of TDOT Standard Specifications for Road and Bridge Construction (available on the TDOT website).

Fixed structures may not be constructed within public right-of-way, since these structures pose a hazard to the driving public. This includes: retaining walls, fences, signs, sign posts, playground equipment, etc. Brick or masonry mailboxes are not allowed within public right-of-way; only wooden posts or other “breakaway” designs may be used for mailboxes located within public right-of-way. Brick mailboxes are a safety hazard if located within 10 feet of the street pavement.

Chapter 8
OVERALL STORMWATER PLANNING

8.1 Objectives for Stormwater Planning

Stormwater planning is usually not perceived as a high priority by the public for several reasons. Flooding happens infrequently, and the benefits of stormwater planning are taken for granted whenever rain falls and flooding does not occur. Most people do not notice stormwater drainage systems, particularly if located underground or at the property edge. A stormwater drainage system is often considered as unimportant, inconvenient, or too expensive to construct. Problems result when a drainage system is undersized during design or not constructed according to plans.

The benefits of stormwater quality planning are difficult for most people to understand, with many common misunderstandings about natural creeks and streams. Grass clippings, leaves, mulch and other "natural" materials are often disposed into creeks and stormwater drainage systems, as some people do not understand that these materials do not benefit the creeks at all but actually consume the dissolved oxygen in the creek and change pH levels. It is commonly believed that fish in the creek will consume cooking grease, unwanted food from restaurants and grocery stores, sanitary sewer flows, and pet animal wastes; actually these materials severely deplete the dissolved oxygen, change pH levels, and frequently carry harmful bacteria and viruses. Urban areas with lots of streets and roads receive a constant uniform loading of gasoline exhaust particulates, dripping automotive fluids, particles from brake linings or tires, etc.

Stormwater planning and stormwater modeling are required by federal agencies such as FEMA (flooding control, flood insurance) and USEPA (pollution reduction goals, water quality targets). The difficult aspect of stormwater planning is that it requires forethought, goals, slow but steady progress, the coordinated efforts of many entities, and the efficient and intelligent use of time, energy and resources. The principal objectives for stormwater planning are:

- To protect human health and safety to the maximum extent practical.
- To minimize damage to private property and structures within the City of Knoxville.
- To minimize damage to streets, bridges, sidewalks, trails, parks, public utilities and drainage channels.
- To reduce expenditures of public money for constructing expensive flood control projects.
- To preserve and protect the natural creeks, streams and waterways within the City of Knoxville for the purposes of environmental preservation, human enjoyment and recreation, floodplain capacity, and property values.
- To protect stormwater quality for the intended level of designated use on each stream or creek, and to restore/enhance water quality as directed by the state of Tennessee or other authorities.

- To wisely spend time, energy and resources of city employees and city equipment in pursuit to best serve the interests of the citizens of Knoxville.

8.2 Stormwater Quantity and Quality Considerations

Historically, the goal of stormwater design has been to safely control and convey stormwater without flooding houses, buildings, streets and yards. The principal method is to select adequate sizes for ditches, drop inlets, pipes, culverts and bridges to allow peak flows to move downstream. Stormwater detention basins help to reduce the potential for flooding by slowing stormwater runoff response.

Over the last three decades, national attention has been focused on improving water quality of streams, lakes, rivers and wetlands. Today, stormwater quantity and quality design are equally important in terms of protecting the natural creeks and streams within the City of Knoxville, in addition to Fort Loudoun Lake (Tennessee River) and its two tributaries. Consideration of stormwater quality allows fish, aquatic wildlife, vegetation and other animals to thrive and flourish in the natural creeks and streams. Greenways and parks, enjoyed by many Knoxville citizens, are typically located near waterways and creeks; this allows many more people to become interested in the creeks and streams.

Quantity considerations (controlling peak flows and reducing flood damage) will continue to be a high priority. Peak flows and total runoff volume are heavily influenced by the total amount of impervious areas. As a watershed is urbanized and impervious areas increase, flooding and drainage issues become more important. Flooding may occur at locations where development has encroached upon the floodplain, two channels intersect, channel slope or roughness coefficients limit the channel conveyance, or the floodplain width has been restricted.

Quality considerations can be addressed by nonstructural and structural means in ways that are often subtle and unobtrusive. For instance, stormwater detention basins are also required to reduce pollution by having a minimum drawdown time of 24 hours and a maximum drawdown time of 72 hours. Detention basins must have trash racks to capture debris and floatable materials. Well-maintained grass channels will slow the process of erosion and also capture sediments. Floodplains can be preserved as buffer zones, by including them as parks and greenways. Reducing stormwater volumes and peak flows are generally beneficial to improving stormwater quality.

8.3 Open Versus Closed Systems

A major consideration in the preliminary phase of any development project is whether to design open or closed stormwater conveyance systems. An open drainage system is defined as having every portion of the channel exposed directly to the atmosphere, without any possibility of pressure flow. A closed drainage system (typically with pipe, culverts, drop inlets, manholes) is only exposed directly to the atmosphere at a few locations, so that pressure flow typically occurs during heavy storms.

The potential advantages of an open stormwater conveyance system:

- Inspection is much easier to perform for an open drainage system when compared to a closed drainage system. Obvious problems and poor performance can be observed in both dry conditions and wet conditions. Pictures can be taken for documentation.
- Maintenance of open drainage systems can usually be done with ordinary grading equipment, whereas a closed drainage system often requires OSHA confined-space procedures, artificial lighting, ladders, nonsparking tools, rescue team on standby, etc.
- An open drainage system is more conducive to natural vegetation and wildlife than a closed system. Trees, grass, shrubs and vegetation require open sunlight to grow. An open system contains dirt, soil and mud, which are primary habitats for many creatures.
- Open drainage systems allow groundwater recharge, infiltration of stormwater, and evaporation; thus an open drainage system is a more natural condition than a closed system.
- Open drainage systems typically have lower velocities, which will reduce downstream peak flows. Lower velocities at culvert entrances and outlets will help to limit scour and erosion.
- Open drainage systems allow more settling of particulates, absorption of dissolved chemicals into soils and vegetation, and more opportunity for trash/debris to be captured. Stormwater quality requirements, such as first flush treatment, can be incorporated.

Potential advantages of a closed stormwater conveyance system:

- A closed drainage system has less surface area that is dedicated to conveying stormwater, which allows more property to be used for other purposes.
- A closed drainage system may reduce erosion by limiting stormwater contact with erosive soils and steep slopes (although velocities may be increased at the system outlet).
- A closed drainage system is lined with impermeable material so that stormwater infiltration losses do not occur. This allows a closed system to be installed near buildings, foundations or other structures where an open system may not be desirable.

The City of Knoxville Engineering Department has a strong preference for open drainage systems. However, it is realized that open drainage systems may not be feasible for a particular development. Usually, the choice of an open or closed drainage system relies heavily upon the existing drainage systems for neighboring properties, the adjacent street drainage system, and distance to potential drainage outlets. Also, the available elevation difference on the property can influence the choice of systems, since gravity is the driving force for almost all stormwater drainage systems.

It is expected that the developer or landowner will weigh the potential benefits and costs of each system (open versus closed), and then make a reasonable choice. Since stormwater detention is required for most properties, the type of detention basin makes a large impact on the choice of an open or closed drainage system. Underground detention structures are not generally allowed in the City of Knoxville (as explained in the Knoxville BMP Manual, ST-08).

8.4 Minor and Major Drainage Systems

A minor drainage system consists of swales, ditches, gutters, inlets, pipes and other structural measures which are necessary to carry the 10-year storm. These elements are typically sized by Manning's equation or other types of flow design procedures to handle a specified storm.

Whenever possible, ditches and pipes are typically overdesigned by choosing somewhat larger sizes; differences in material costs for standard manufactured pipe sizes are small and inconsequential when compared to the benefits of a well-designed drainage system.

A major drainage system consists of overland relief swales, roadway sections, floodplains, depressions, detention basins, storage dams, natural streams and creeks, large box culverts, bridges and other features that carry large flows such as the 100-year storm event. Whether intentionally designed or not, a major drainage system will develop during the course of a large storm event. For a given development, the design engineer should always consider the effects of blockage, collapse or inadequate capacity for one or more of the key conveyance structures.

8.5 Watersheds and Regional Planning

Figure 8-1 shows the principal rivers that join at Knoxville, along with the approximate extent of the Knoxville city limits. Most of the creeks and streams in Knoxville flow to the Tennessee River (Fort Loudoun Lake), which is controlled by a large TVA concrete dam located approximately 40 miles downstream from Knoxville at Lenoir City (River Mile 602.3). The Holston River and French Broad River join together within the City of Knoxville to form the Tennessee River (River Mile 652.0). Along the northern edge of the city limits, Beaver Creek and its tributaries flow in a southwest direction to the Clinch River.

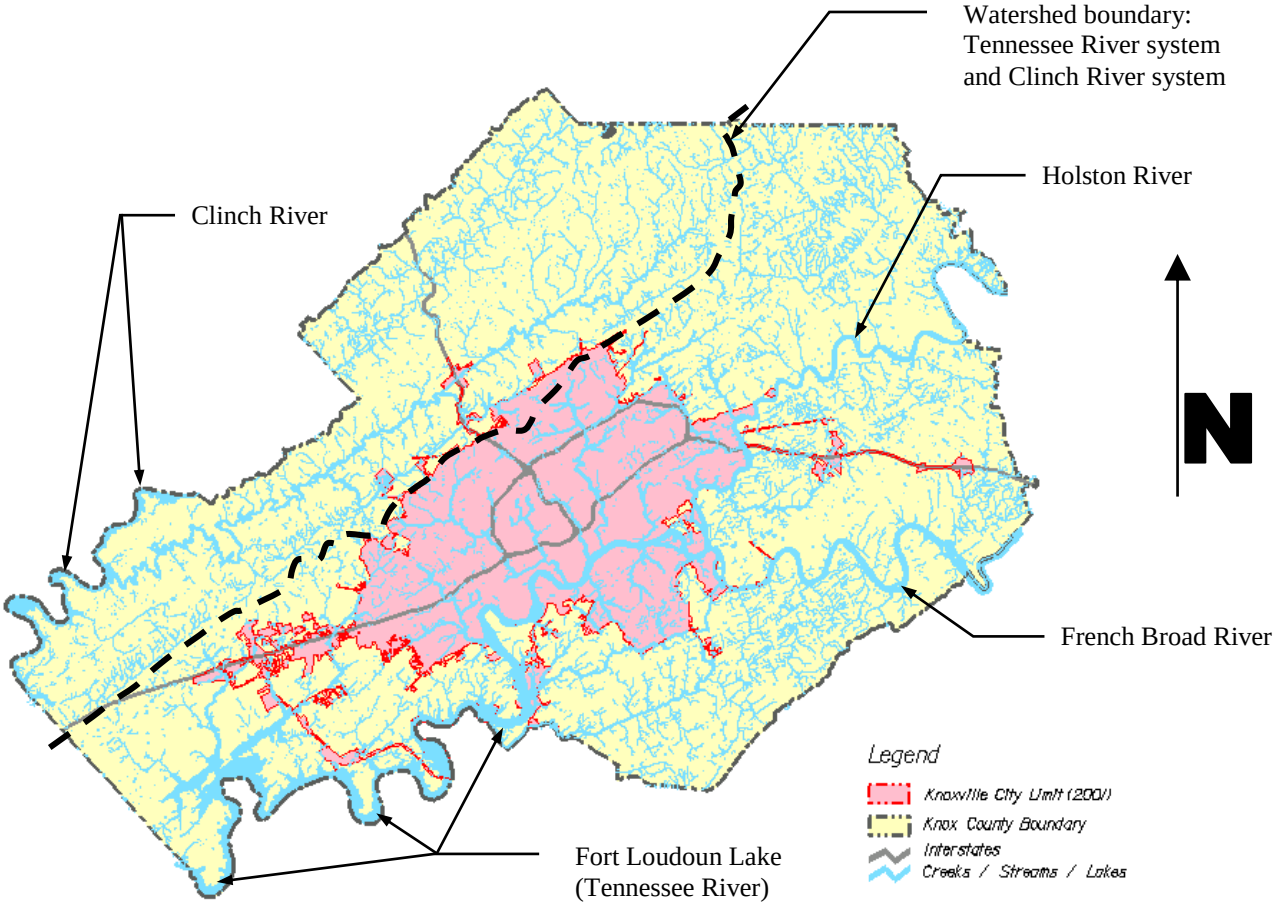

Figure 8-1
Knox County Drainage Overview

There are approximately 30 watersheds within the City of Knoxville for the purposes of stormwater monitoring and reporting. The NPDES permit issued to the City of Knoxville by the state of Tennessee requires that basic watershed sampling and analysis must be performed annually. Table 8-1 lists the watersheds within the City of Knoxville, and also the current listing of quality-impaired waters within the city limits. Some watersheds are located entirely within the City of Knoxville; other watersheds extend outside the city limits and are thus shared jointly by the city and county governments. Watershed boundaries, names and locations are shown online at the Water Quality Forum website - www.waterqualityforum.org/.

Regional planning is currently conducted on a limited basis when funds are available. A few regional detention basins have been constructed at locations with known drainage problems and very inexpensive land; however, this combination of factors does not occur very often. The ability of the municipal government to change the city landscape, or to modify even small drainage systems, is very limited. Major reasons include:

- Existing property and land uses, once approved and constructed, are legally grandfathered and protected, unless the city or state government can show overwhelming evidence that changes are necessary to protect the general welfare.
- The existing stormwater drainage infrastructure is very expensive to replace or modify, particularly bridges and highway culverts. Maintaining transportation routes is a basic function of any government, which severely limits economically feasible work in and near streets or highways.
- Land along the natural creeks and streams includes many older parts of the city, with drainage pipes 50 to 75 years old. Older portions of any stormwater drainage system typically have low conveyance due to poor maintenance or and were not designed according to modern standards.
- Limitations and constrictions that are caused by older, undersized or incorrectly installed drainage pipes will affect system performance for a considerable distance upstream.

Regional planning, when fully implemented in the future, will typically consist of HEC-HMS and HEC-RAS models (to support water quantity and flooding computations) along with a mixture of stormwater quality methods and models to satisfy TDEC pollution reduction goals. The potential impacts of stormwater regional planning on typical site development projects are:

- Durable materials with an expected 100-year life for drainage pipe, culvert or channel are required for stormwater conveyance systems that handle offsite drainage. Reinforced concrete pipe (RCP) is specified for pipes and culverts within the public right-of-way.
- A larger size of drainage pipe, culvert or channel may be requested by the Stormwater Engineering Division for stormwater conveyance systems that handle offsite drainage. This may occur even if upstream or downstream conveyances have smaller pipe sizes.
- Floodplains and stream buffers may be more uniformly managed to ensure adequate conveyance capacity.
- Stormwater treatment measures may be categorized into effective and ineffective BMPs based on Knoxville conditions, types of pollution, local stream sampling/testing, and water quality results.

Table 8-1
List of Watersheds Within the City of Knoxville

Watershed Name	City Watershed ID #	USGS Hydrologic Code (with 0601 prefix)	The combined 1998/2000/2002 listings of 303(d) impaired streams for TMDLs (Total Maximum Daily Loads)									
			-----	Flow Alterations	Habitat Alterations	Low Dissolved Oxygen	Metals	Nutrients	Organic Enrichment	Pathogens	Priority Organics	Siltation
Ft. Loudoun Lake (Tennessee River)	0	0201	PCBs								✓	
First Creek	1		TMDL-1		✓			✓		✓		✓
Second Creek	2		TMDL-1		✓		✓	✓		✓		✓
Third Creek	3		TMDL-1		✓			✓		✓		✓
Fourth Creek	4		TMDL-2		✓					✓		
Goose Creek	5		TMDL-1		✓					✓	✓	✓
Baker Creek	6		TMDL-2		✓					✓		
Williams Creek	7		TMDL-2		✓					✓		
Knob Creek	8											
Toll Creek	9											
Ten Mile Creek	10											
Whites Creek	11		(TMDL-1)		✓			✓		✓		✓
Turkey Creek	12							✓		✓		✓
East Fork	13		(TMDL-1)		✓			✓		✓		✓
Spring Creek	15											
DeArmond Spring Br.	16											
Sinking Creek	18									✓		
French Broad River	30	010		✓		✓		✓	✓			
Holston River	50	0104			✓							✓
Swanpond Creek	51				✓							✓
Inman Branch	52											
Love Creek	53				✓							✓
Woods Creek	54											
<Clinch River>	70	0207										
Beaver Creek	71				✓					✓		✓
Grassy Creek	77											✓
Knob Fork	79				✓							✓
Little River	90	0201				✓		✓	✓		✓	✓
Stock Creek	91				✓	✓		✓	✓	✓	✓	✓
McClure Creek	99											

8.6 Total Maximum Daily Load (TMDL)

TDEC, in accordance with mandates from the U.S. Environmental Protection Agency, has made comprehensive lists of polluted streams and rivers within the state of Tennessee. The 303(d) list is compiled using the Hydrologic Unit Code (HUC), an eight-digit number that indicates the watershed as mapped by the United States Geological Survey. The 303(d) list is updated every two years by each state, with requirements for the list to be publicly available and for the individual cities and counties to be very proactive in addressing the cited types of pollution. See the TDEC website for the current 303(d) list; streams may be added to the list or even removed if the pollution reduction goals have been met.

TDEC has authorized pollution reduction goals for various streams across the state of Tennessee, based on modeling the specific pollutants to determine a total maximum daily load (TMDL). Water quality models are developed and then calibrated using existing data such as average flow discharge or water quality. The initial wave of TMDL studies modeled for the Knoxville creeks and streams in February 2003 are for fecal coliform pollution (pathogens) and are shown in Table 8-1. Additional pollutants (sediment, heavy metals, nutrients) will be modeled in future years. Since the City of Knoxville must meet TMDL goals and targets for each listed creek and stream, additional measures for pollution reduction may be required above and beyond the first flush criteria.

8.7 Preservation of Natural Creeks and Streams

Preservation of Knoxville's natural waterways has been encouraged and promoted by the city government and by local environmental groups. The City of Knoxville has a creek cleanup crew that not only handles trash and debris, but also does minor inspections, maintenance and minor restoration along creeks. IJAMS nature center (www.ijams.org) and Keep Knoxville Beautiful (http://www.korrnet.org/keepknox) have been very effective for several years in raising citizen awareness, providing educational programs for children, organizing creek cleanup days, and labeling storm drain inlets. Other environmental awareness groups have also been very active in the Knoxville area. The Adopt-A-Stream program and other watershed initiatives gives many citizens a chance to enjoy local streams while serving the community's interests also.

A system of parks and greenways (generally following the creeks) has been implemented across Knoxville and continues to grow year by year. Portions of the system connect to greenways outside the city limits that are maintained by Knox County. As development and redevelopment occurs along natural creeks, property owners are required to cooperate with greenway plans and routes established by MPC. Typically this is done through greenway and conservation easements, along with "green development" along streams and creeks wherever possible.

Stream buffer zones have been established for blue-line streams. All new development and redevelopment adjacent to a blue-line stream must have a restricted-use buffer zone for construction. In addition, a separate no-fill line is established on streams which have been studied by FEMA. The no-fill line is halfway between the 100-year floodway and the 100-year floodplain fringe. See Section 22.5-21 of the Knoxville Stormwater and Street Ordinance for detailed information.

8.8 Sinkholes

The Knoxville area contains a lot of sinkholes due to the presence of karst geological formations. The general topography of the region is a series of hills and ridges that are aligned in a direction from southwest to northeast. Limestone rock groups are folded in layers at various angles, so that outcroppings are hard to predict. Natural depressions usually indicate the presence of sinkholes. In instances where the Stormwater Engineering Division suspects that a sinkhole is involved, a TDEC expert can be summoned to make a final determination. An Aquatic Resource Alteration Permit (ARAP) is required if a property development includes filling within the limits of a sinkhole, due to the interest TDEC places in protecting groundwater resources.

The presence of a sinkhole on a property can affect the amount or types of project development that may be allowed. Policy 12 (Sinkhole Development) in Appendix C contains a definition of what a sinkhole is, typical restrictions, necessary volume computations, and locations of notable sinkholes with documented drainage problems. Sinkholes have occasionally been observed to stop draining properly; in some cases, it appears to have been caused by construction work nearby. In other instances, there is no known cause for the failure to drain. Therefore, every sinkhole is analyzed from the position that it will become plugged someday or simply may not drain adequately during design storm conditions.

A sinkhole must not be considered as a stormwater infiltration measure, as it does not have a designed flow rate and may even connect directly to the groundwater table. See ST-03 in the Knoxville BMP Manual for a description of stormwater retention and infiltration systems. It is not unusual for an existing neighborhood to contain several sinkholes, as they have traditionally been considered reliable drainage outlets in decades past. The total volume of stormwater runoff draining into a sinkhole must not be increased. Extended detention basins shall be designed to reduce postdeveloped stormwater runoff volumes to the level of predeveloped volumes. Any chemicals or pollutants in stormwater runoff could potentially change pH values and cause further dissolution of limestone formations.

Policy 12 also requires that a sinkhole easement, and in some cases an associated sinkhole access easement, will be dedicated around the sinkhole for the purposes of allowing inspection and potentially maintenance to correct drainage problems.

Chapter 9
STORMWATER DESIGN

9.1 Hydrology Methods

Table 9-1 shows the various hydrologic computation methods that can be used to compute peak flows in the City of Knoxville. The NRCS Unit Hydrograph method is specifically cited for drainage computations in the Knoxville Stormwater and Street Ordinance (Sections 22.5-21 and 22.5-33), using 24-hour Type II rainfall distribution and AMC II soil conditions. The NRCS method is used to compute a peak flow for sizing stormwater conveyances or to generate a hydrograph for the purposes of detention routing.

Table 9-1
Hydrology Design Methods

Method	Drainage Area	Time of Concentration	Impervious	Design Storms
Rational	< 50 acres	-- any --	0% to 100%	2 to 500 years
NRCS Unit Hydrograph	-- any --	-- any --	CN 40 to 98	1 to 500 years
TVA Regression Equations	> 230 acres	N / A	< 75%	2 to 500 years
USGS Regression Equations	> 135 acres	N / A	< 75%	2 to 100 years

Uses for the various hydrologic computation methods are discussed in the Knoxville BMP Manual. The NRCS Unit Hydrograph method shall be used for all design calculations, but other methods may be consulted for sizing stormwater conveyances (particularly if conservative values and assumptions are used). For equations, consult the Knoxville BMP Manual at these locations:

- NRCS Unit Hydrograph ST-10, Detention Computations
- NRCS Unit Hydrograph ST-11, Detention Example for Spreadsheet
- NRCS Unit Hydrograph ST-12, Detention Example for HEC-1 & HEC-HMS
- Rational, TVA, USGS ST-13, Other Hydrologic Computations

The NRCS Unit Hydrograph shall be used with average antecedent moisture conditions (AMC II) and Type II rainfall distribution, as specified by the NRCS Technical Release 55 (TR-55) publication from June 1986. The NRCS was formerly called the Soil Conservation Service (SCS), part of the United States Department of Agriculture. The TR-55 publication (Urban Hydrology for Small Watersheds) is the principal technical reference to be downloaded from NRCS: http://www.wcc.nrcs.usda.gov/hydro/hydro-tools-models-tr55.html

9.2 Functional Design of Stormwater Drainage Systems

In selecting the design frequency storm, the following criteria (listed in the order of being progressively more restrictive) will be used:

- Longitudinal side drains shall be designed for a 10-year frequency flood, providing that no residential or commercial structures are flooded by a 100-year flood.
- Roadway cross-drains for all local streets and collector streets shall be designed for a 25-year frequency flood, providing that no structures are flooded by a 100-year flood.
- Roadway cross-drains for arterial streets or a higher street classification shall be designed for a 50-year flood, provided that no structures are flooded by a 100-year flood.
- All bridges, structures, or embankments in floodways designated as part of the Federal Flood Insurance Study shall be designed to pass a 500-year frequency flood without raising the existing 500-year flood profile.

In instances where the contributing drainage area is 200 acres or greater, the 100-year design storm shall also be computed and analyzed, even though the design storm is a lesser storm event. The 100-year design storm will typically be carried by a combination of the installed stormwater drainage system and some form of overland relief flow, typically streets and roads which can temporarily store or convey excess stormwater runoff. Another form of overland relief flow, commonly used in residential subdivisions, are the drainage swales between houses and through neighborhoods. The 100-year design storm (for areas greater than 200 acres) must be contained within a permanent drainage easement or public right-of-way. State highways and interstates are generally capable of passing 100-year design storm safely with a minimum freeboard of 1 feet.

9.3 Design of Open Channels

Manning's equation is the principal means for determining flow capacity and velocity in open channels. Knoxville BMP Manual contains guidance, equations, and coefficients for designing open channels in ES-22 (Channel Linings) and ES-23 (Riprap). Table ES-22-4 lists permissible velocities for various channel lining materials and types of grass. Grass channels are often designed using retardance classifications to determine Manning's roughness coefficient based on the product of hydraulic radius times velocity, an iterative process for which spreadsheets are useful. Grass channels should be analyzed for mowed conditions (when velocity is greatest) and unmowed conditions (when flow depth is greatest) to verify adequacy of design.

A minimum 6" freeboard for the design storm is required for ditches and open channels that are adjacent to streets and roads. This will help to ensure that the pavement subgrade is not repeatedly inundated by smaller design storms, which can eventually lead to damage or failure of the pavement subgrade. When two open channels join together, some form of riprap or other armored surface may be provided. Consult ES-25 (Outlet Protection) in the Knoxville BMP Manual for typical energy dissipators and stilling basins.

9.4 Design of Curb and Grate Inlets

Use of City of Knoxville standard inlets or TDOT standard inlets is required within all public rights-of-way or drainage easements. This allows easy repair or replacement of any damaged grates and curbs using standard off-the-shelf items. Use of standard inlets on private property is encouraged for reasons of structural reliability, ease of maintenance, common availability and standardized installation methods. See City of Knoxville standard details COK-10 and COK-11 (on the City Engineering Division webpage) for frames/grates/inlets at locations with 24" wide concrete gutter, with the required "No Dumping - Drains to River" stormwater message.

The designer must locate street inlets to quickly drain stormwater from paved surfaces, keeping streets passable and safe for vehicular traffic. Street inlets must be spaced and located in a manner to carefully balance vehicle safety, drainage system capacity, economics and efficiency. Maximum inlet spacing is generally 300 feet unless proven otherwise by computations. Inlets should be located at uphill corners of each street intersection to prevent sheetflow of stormwater. The basic geometry of stormwater flow along curbs is a thin shallow triangular cross-sectional area. If the section contains curb and gutter, then the stormwater flow is a composite shape formed by both concrete and asphalt surfaces, for which Manning's equation is still applicable. See Figure 9-1 for basic geometric considerations in computing gutter flow depth and velocity.

Based upon the longitudinal slope of the gutter and the cross slope of the street, the gutter flow will spread across the street. The spread impacts vehicular traffic in a negative way, causing vehicles to hydroplane or to pull in one direction. Basic references for computing spreads, inlet capacities, and interception rates for curb and grate inlets are FHWA Hydraulic Engineering Circular No. 12, *Drainage of Highway Pavements* (March 1984), or FHWA Hydraulic Engineering Circular No. 22, *Urban Drainage Design Manual* (November 1996). Both references can be downloaded in Acrobat format at the FHWA website:

(http://www.fhwa.dot.gov/bridge/hydpub.htm)

Detailed inlet computations are usually not required for local residential streets and alleys, except at sag locations where potentially inadequate inlets could flood nearby houses and buildings. Slow design speeds on local streets usually minimize the impact of spread and hydroplaning, although local streets do tend to have steeper approach slopes for intersections. Typical considerations for inlet design include:

1. Place inlets at all sag locations and other depressed areas to ensure positive drainage. Compute flow capacity of the inlet by ponding stormwater to a depth not higher than top of curb. Use orifice equation (with actual open area of grate) and weir equation (open perimeter of grate) to determine flow capacity of inlet. Ensure that ponded water does not flood nearby structures, buildings, or houses. Flanking inlets, at an offset distance of 25' or 50', are desirable in sag locations with large flow rates. A combination inlet (curb + grate opening) is less likely to clog at sag locations.

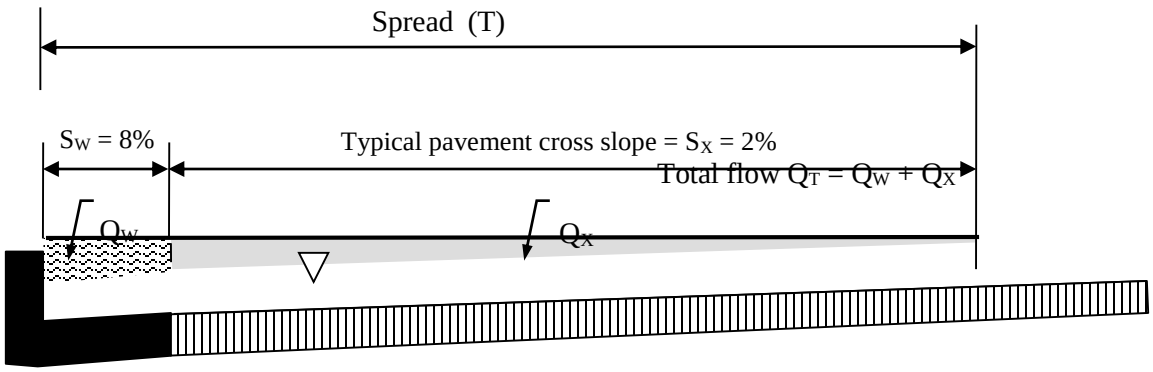

Curb and Gutter Section (composite flow)

Figure 9-1
Street Pavement Drainage Section

2. Place inlets at street intersections to prevent stormwater from flowing across a street or entrance. This is particularly important wherever a local street intersects a larger street, such as a collector or arterial. Valley gutters across street intersections are not allowed, unless specifically requested for very short dead-end streets or cul-de-sacs.
3. Select standard grates and avoid using grates with unusual shapes or configurations, such as beehive or raised designs. Install standard sizes of manholes and inlet tops. Grate openings should be oriented to allow for safe bicycle traffic.
4. Curb and grate inlets have a much higher interception rate for streets with relatively flat grades. Therefore, all other considerations being equal, inlets along steep sections of roadway are not as effective in intercepting stormwater.
5. Maintain a minimum curb and gutter longitudinal slope of 0.5% if possible to keep positive drainage. When designing a flat stretch of street, the street designer may incorporate a gently rolling vertical profile to maintain positive drainage (along with placement of additional inlets).

9.5 Design of Storm Drainage Systems

Manning's equation is typically used to compute non-pressurized flow in pipes and storm drainage systems where inlets and headwalls are closely spaced to allow atmospheric pressure throughout the entire system. Computations for each pipe should be performed systematically (such as in a table) and include the drainage area, design flow, velocity, capacity, diameter or size, slope, length, construction material, upstream and downstream inlets, etc. Computations should also include one or more maps and drawings to show drainage areas, impervious surfaces, slopes, land cover, paths for computing time of concentration, and any offsite areas that contribute flow. Minimum size diameter of storm drainage pipes is 15 inches. For allowable types of pipe see Policy 16 (Stormwater Pipe Materials) in Appendix A.

Computation of the hydraulic grade line (HGL) may be required by the Engineering Department, particularly if pipes are designed without excess capacity, pipes are placed at steep slopes with high velocities, or if there are excessive deflection angles in the stormwater drainage system. Excessive velocities should be avoided to prevent HGL problems and the potential for erosion. Minimum design velocities should be at least 3 feet per second to ensure that a storm drainage system has some capability for self-cleaning (typical target slope is 1% or greater).

9.6 Design of Culverts

A culvert is a single drainage pipe, not part of an enclosed system, which has a pipe or box opening as the inlet condition. Allowable flow within culverts are subject to inlet control, outlet control, or some combination of the two controls. Culvert design is performed using FHWA Hydraulic Design Series No. 5, *Hydraulic Design of Highway Culverts* (September 1985), which can be downloaded at http://www.fhwa.dot.gov/bridge/hydpub.htm as an Adobe Acrobat document. The flow equations for a culvert are complex, such that design nomographs and procedures in Hydraulic Design Series No. 5 are the most common method of solution.

Considerations in culvert design include analysis of open channels at both ends of the culvert, potential for storage or channel routing, and design of energy dissipators and outlet protection. Head loss can be reduced by using headwalls, wingwalls, mitered slopes, and tapered inlets; refer to Hydraulic Design Series No. 5 for more details concerning culvert design. In general, reinforced concrete pipe (RCP) is more hydraulically efficient than corrugated metal pipe (CMP). Considerations for determining the allowable headwater are potential for upstream property damage, road overtopping, erosion potential, human safety, and whether wingwalls and headwalls are designed as part of the culvert. Minimum size diameter for culverts is 15 inches. See Policy 16 (Stormwater Pipe Materials) in Appendix A for allowable culvert materials.

9.7 Hydraulic Grade Line Computations

Due to short pipe lengths of typical drainage systems, normal pipe flow from Manning's equation only occurs in the middle section of the various pipes. Minor energy losses (directional changes, bend losses, inlet expansion and contraction effects) may cause the hydraulic grade line to be higher than the crown of pipe or the top of inlet. This can occur even if velocities and flows from Manning's equation appear to be acceptable and seem to indicate adequate pipe capacity.

If the hydraulic grade line is above the top of inlet, then stormwater escapes from the inlet and flows down the street. This may lead to unsafe road conditions, local flooding, displaced grates or manhole lids, etc. Hydraulic grade line computations are usually not necessary in instances where the drainage designer chooses the next larger size of pipe than necessary to convey design flows. Where the hydraulic grade line is deemed to be critical by the Engineering Director or his representative, the HGL shall be computed using the form in Table 9-2 or equivalent method.

HGL computations must be performed by a registered engineer using principles of hydrology and hydraulics, and basic formulas such as conservation of momentum and energy, continuity of flow, and types of flow classification. Open channel flow is preferred, since pressure flow allows less margin of safety and also creates more stress on pipe joints. Start at the outlet for the entire drainage system and compute the HGL at the next upstream junction(s), by repeating the procedure in columns 1 through 22 for each incoming pipe to determine the next HGL point.

Column 2	For the HGL table, the principal categories are manhole or drop inlet. Also note whether the invert of the structure is shaped with a round half-section at the proper invert elevations, in order to efficiently convey water and reduce energy losses. This information affects the total head loss adjustment in column 19.
Column 3	For the most downstream junction (i.e., the drainage system outfall), find the outlet WSE from backwater computations, outlet channel flow depth, or by assuming 0.8 times the pipe diameter/height. Determine outlet WSE for other inlets by using inlet WSE (column 21) for the downstream inlet.
Columns 7-8	The friction slope S_F is computed from the equation shown at the bottom of Table 9-2. Manning's roughness coefficient (n), the cross-sectional flow area (A), and the hydraulic radius (R) should be already known from stormwater drainage computations to size the pipes and culverts.
Columns 9-10	The loss H_O is equal to contraction loss from flow entering the outlet pipe.
Columns 11-18	For a given inlet, there may be more than one incoming pipe. List all the
**	incoming pipes using one row each. Do not compute H_i or H_Δ using lateral pipes carrying less than 10% of peak flow of largest incoming pipe.
Columns 11-14	** Compute the value of Q_iV_i for each pipe. The pipe with the largest value of Q_iV_I is used to compute the head loss assigned to the inlet (H_i), which is equivalent to expansion losses of flow leaving the pipe.
Columns 15-17	** Enter deflection angle for each incoming pipe, when compared to the outlet pipe. A value of 0º means that there is no bend between the incoming pipe and the outlet pipe. Then compute K for each angle, by interpolating from values at the bottom of Table 9-2. The largest value of H_Δ will be used to determine H_L in column 19.
Columns 18-19	Add the values for the individual components of junction loss (H_O, H_i, H_Δ) to compute the total junction loss, H_L. Adjust the value of H_L in column 18 based on either one or both conditions. Multiply by 1.3 if the junction is a drop inlet that receives more than 10% of its total flow from the surface. And/or multiply by 0.5 if the junction has a shaped invert with a smooth half-diameter channel formed into the bottom for each incoming pipe to the outlet. The embedded channel must be durable and continuous.
Columns 20-21	Column 20 = column 8 + column 19. (H_T: Total head loss)
	Column 21 = column 3 + column 20. (Inlet HGL or WSE)
	Compare column 21 to column 22 to see if the drainage system overflows the top of manhole or the catch basin lip. Use the answer in column 21 as the outlet HGL (column 3) for the next upstream junction.

9.8 Analysis of Downstream System

The Knoxville Stormwater and Street Ordinance requires that discharge from a developed site (typically a stormwater detention basin) must be routed to an existing natural or manmade stormwater channel with adequate capacity. Calculations must be submitted that show the capacity of the receiving stormwater channel to handle the 2-year and 10-year design storms. The routing calculations must extend at least as far as the second downstream street crossing or to a blue-line stream. Routing calculations must be extended even further downstream, if the Engineering Director or his representative has reasonable concern about the capacity of a downstream stormwater channel based on scientific or engineering evidence.

The first reason for analysis of the downstream system is to ensure that known flooding problems are not exacerbated. Stormwater detention basins are always designed so that the peak flow discharge is not increased. This means that the immediate downstream receiving channel, if it currently has adequate capacity, will continue to be adequate. However, if the stormwater detention basin causes a longer duration for peak or near-peak flows (as shown in Figure 10-1), then flooding could occur in locations where it did not occur before.

The second reason for analysis of the downstream system is to determine any backwater effects on the detention outlet structure and embankment. In most situations, the design engineer assumes inlet control conditions for the detention basin control structure, which must be verified to ensure that the detention basin operates as designed.

Analysis of the downstream system will usually include flow capacity and velocity for existing and proposed flow conditions, using Manning's equation at a minimum, but could potentially include backwater routing effects with a computer program.

Table 9-2
Hydraulic Grade Line Computation Form

Structure Location		Outlet HGL or WSE	Pipe Loss					Junction Losses										Adjust H_L	Total Head Loss	Inlet HGL or WSE	Rim Elev or Curb Elev
			Downstream pipe or culvert			Friction Loss		Exit Loss		Entrance Loss				Bend Loss			Total Jnct Loss	Drop Inlet (x 1.3) / Shaped Inlet (x 0.5)			
#	Type		Dia	L_O	Q_O	S_F	H_F	V_O	H_O	Q_i	V_i	Q_iV	H_i	Δ	K	H_Δ	H_L		H_T		
----	----	----	ft	ft	cfs	%	ft	fps	ft	cfs	fps	----	ft	---	---	ft	ft	ft	ft	----	----
1	2	3	4	5	6	7	8	9	10	11	12	13	14	15	16	17	18	19	20	21	22

Outfall: Determine outlet WSE by backwater computations, or using outlet flow depth of 0.8 x pipe diameter or height.

Peak flow and velocity (columns 6, 9, 11 and 12) are normally part of storm drainage computations.

$S_F = Q^2 n^2 / (2.208\ A^2 R^{4/3})$ or determined by charts.

$H_F = L\ S_F$

$H_O = 0.25\ (V_O^2/2g)$

$H_i = 0.35\ (V_i^2/2g)$

$H_\Delta = K\ (V_i^2/2g)$

$H_L = H_O + H_i + H_\Delta$

Then adjust H_L based on inlet

90° K = 0.70
75° K = 0.64
60° K = 0.56

45° K = 0.47
30° K = 0.35
15° K = 0.19

Chapter 10
STORMWATER DETENTION AND QUALITY

10.1 Detention Requirements

The requirements for stormwater detention are described in the Knoxville Stormwater and Street Ordinance (Chapter 22.5 of the city code) included within Appendix B. All site development projects exceeding the thresholds listed in Section 22.5-23 must incorporate stormwater detention and first flush treatment as part of the design. Additional information on the design of stormwater detention and first flush treatment is included in the Knoxville BMP Manual (ST-10 through ST-12). Stormwater detention is not required in the following two situations:

- The project site discharges stormwater runoff directly into the Tennessee River, Holston River or French Broad River without flowing through a named creek/stream, through a public drainage system, or across a downstream property boundary.
- Stormwater detention for a project site is either unwarranted or impractical. The developer must submit complete hydrologic and hydraulic computations to support this conclusion. Typically this might occur in the very lowest downstream reaches of a major watershed, if it can be proved that undetained stormwater should be discharged quickly to avoid the peak discharge timing for the entire watershed. The hydrologic analysis should include more than one representative downstream location for comparing hydrographs.

Even if stormwater detention is waived for the above two situations (as described in Section 22.5-23), the site development must still provide first flush treatment or an acceptable alternative in order to protect stormwater quality.

Typical detention BMPs are dry detention basins, wet detention basins, retention basins and constructed wetlands. Detention computations and methods are discussed in ST-10 of the Knoxville BMP Manual. As specified by ordinance, all detention computations must use NRCS design methods with Type II 24-hr storm and average antecedent moisture conditions (AMC II).

Underground detention structures are not allowed within the City of Knoxville (as explained in ST-08 of the Knoxville BMP Manual). In contrast, underground stormwater quality structures (oil/water separator or sand filtration unit) are encouraged and even required for some land uses. The difference is that stormwater quality structures do not attempt to control or store tremendous volumes of stormwater runoff, with the attendant problems of flooding, hydrostatic pressures, settlement, washout, etc. Stormwater quality structures are scientifically designed with overflow or bypass capabilities to prevent large volumes of stormwater from flowing through the structure.

10.2 Design Criteria for Detention Structures

All stormwater detention structures must attenuate the postdevelopment peak flow rates from the 1-year, 2-year, 5-year, 10-year and 100-year NRCS 24-hour design storms to discharge at or below predevelopment peak flow rates. See ST-10 in the Knoxville BMP Manual for design

computations and methods, including downloadable documents from NRCS and FHWA. Physical design criteria is listed within Section 22.5-31 of the Knoxville Stormwater and Street Ordinance (see Appendix B).

The purpose for detention structures is to slow or attenuate the peak flows downstream by controlling the release rate. The typical predevelopment and postdevelopment outflow hydrographs for a detention basin are shown in Figure 10-1. The postdevelopment peak outflow rate is limited to the predevelopment peak outflow rate as the basis of detention design. However, the postdevelopment condition is likely to discharge at or near the peak outflow rate for a few hours. It should be noted that the conglomerate effect of dozens of detention basins in a watershed may or may not reduce peak flows at a downstream location. This uncertainty is caused by factors such as the infinite types and variety of actual rainfall distributions, spacing and sizes of the detention basins, discharge characteristics for the detention basins, maintenance and conveyance of major drainage channels. Two examples of detention basin computations are given in ST-11 and ST-12 of the Knoxville BMP Manual.

The first detention example, ST-11, uses a very complex "home-made" spreadsheet (in Microsoft® Excel 97), created to compute and route hydrographs through a detention basin structure. The spreadsheet has been tested and verified; however, it tends to be very slow and cumbersome except for fairly new computers. The main purpose of the spreadsheet method is to demonstrate the types of input that are necessary for all detention computations, typical computational procedures that are used in stormwater routing, and a basis for calibrating or comparing other methods.

Worksheet #2 (*Excel file ST11-EST.xls*) is probably the most useful spreadsheet from ST-11 of the Knoxville BMP Manual, and serves as the basis of an initial volume estimate. Worksheet #2 is easy to use and faithfully reproduces the detention volume estimates generated by NRCS Technical Release 55 publication. However, TR-55 detention volume estimates and Worksheet #2 volume estimates do not take into account the first flush volume and thus need to be adjusted upwards. This is because the first flush volume is not merely briefly detained as part of the peak flow reduction, but must be fully captured and then released over a minimum 24-hour time period.

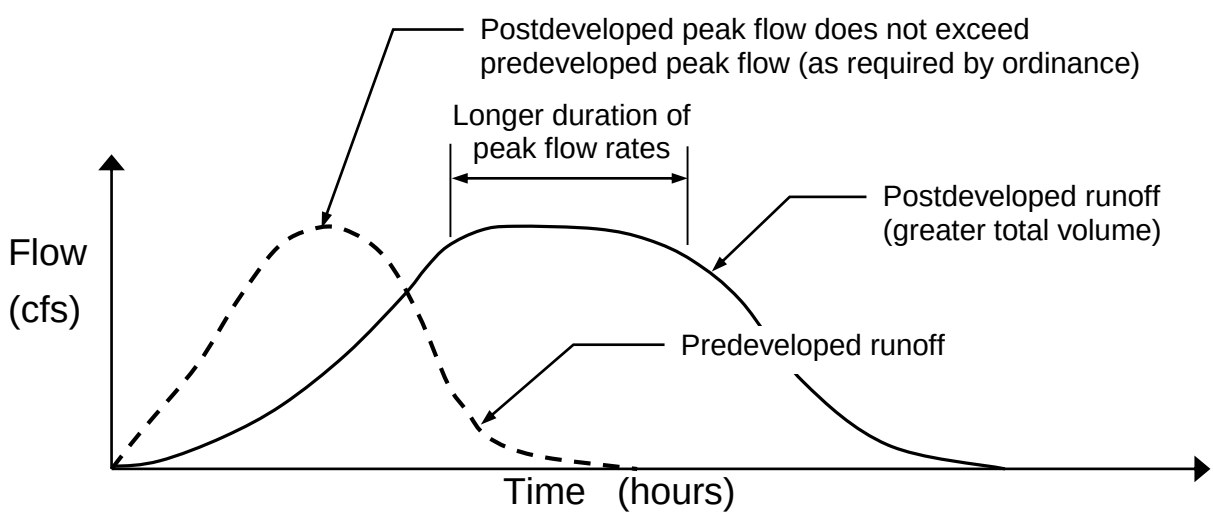

Figure 10-1
Typical Detention Hydrograph

The second example of detention basin computations (ST-12 of the Knoxville BMP Manual) are HEC-1 and HEC-HMS computer runs for a simple detention basin. The HEC-1 computer program

(or the successor windows-based computer program HEC-HMS) is a nationally recognized and trusted free software, developed by the U.S. Army Corps of Engineers, for the purpose of computing and routing hydrographs. The following guidelines should be followed for using HEC-1 (or HEC-HMS) for detention computations:

- Enter the NRCS Type II rainfall distribution, preferably using increments of 0.1 hours as in the Knoxville BMP Manual ST-11 example, using either incremental (PI cards) or cumulative values (PC cards).
- To increase computational precision by a decimal point, multiply basin area (BA card), the pond areas or volumes (SA or SV cards), and the pond outflow rating (SQ cards) by a factor of 10. After the computation is finished, divide the peak inflow rates and peak outflow rates by a factor of 10. The computations should clearly document that this method is being used to increase precision, so that engineers who might review this computation in the future would understand the rationale.
- The pond outflow rating and volume (SQ and SV cards) must be computed at regular intervals, either by hand or preferably by a computer program or spreadsheet, before entering the SQ and SV values into the HEC-1 program.

The Stormwater Engineering Division currently uses Haestad Methods PondPack™ for regulatory review of proposed detention basins and also for checking the as-built conditions. PondPack™ is a very flexible and user-friendly software, and it allows many types of outlet structures with almost any combination of weirs, orifices or culverts. It is understood that the PondPack™ program is relatively expensive, represents a sizable investment in software and training for any potential user, and is therefore not required by the Engineering Department.

10.3 Stormwater Quality Considerations

The stormwater ordinance also requires that the first flush volume for any stormwater detention structure must be contained and then slowly released over a minimum time period of 24 hours and maximum time period of 72 hours. First flush treatment must be provided at locations that would normally provide stormwater detention, even if detention requirements are exempted because the project site flows directly into Fort Loudoun Lake or one of its tributary rivers.

The first flush volume is described in ST-10 of the Knoxville BMP Manual. The purpose is to allow settling and filtering for the first 1/2" of stormwater runoff, which typically contains dust, deicing sands and salt, oils and automotive fluids from leaking vehicles, tire particles, brake pad particles, trash, debris, leaves and small sticks, etc. Preventing the first flush volume from entering the natural streams and creeks has greatly benefited water quality of streams, fish and other aquatic life, city parks, greenways, and residents who live near natural streams and creeks.

The first flush volume for a typical dry detention basin is shown in ST-01 of the Knoxville BMP Manual. The first flush volume is slowly released over a 24-hour period by an underground sand filter, aboveground sand filter, or small discharge orifices. Methods for capturing floatable debris, sediments and other debris can be incorporated into a detention outlet structure at no cost.

The project designer may also consider alternative means of providing stormwater quality such as oil/water separators, grit chambers, long expanses of stormwater filter swales, or constructed wetlands. For some land uses, these stormwater quality structures may be used in place of the first

flush volume. For critical land uses such as large parking lots and gasoline stations, these structures are required in addition to first flush treatment volume (as part of a Special Pollution Abatement Permit - see Chapter 7 of the Knoxville BMP Manual). A project designer may wish to contact the Stormwater Engineering Division for unusual methods of stormwater treatment prior to submittal. See Chapter 4 of the Knoxville BMP Manual (Figure 4-2 in particular) for stormwater treatment removal goals, typical pollutants, and approximate removal rates for urban BMP designed structures.

10.4 Permanent Maintenance Agreements

If there is a stormwater detention or stormwater quality structure shown on the design plans, the Stormwater Engineering Division requires that the current property owner (as well as any future owners of this property) enter into a permanent maintenance agreement with the City of Knoxville. This legal document, called *Covenants for Permanent Maintenance of Stormwater Facilities* (CPMSF), is recorded in the permanent land records with the Knox County Register of Deeds, in addition to being fully described on the final plat. The CPMSF document is prepared by the Stormwater Engineering Division using information supplied by the property owner, and must be signed and executed prior to the issuance of a site development permit. The CPMSF is further described as an engineering policy in Appendix C and shown in the Chapter 2 flowcharts.

A list of engineering policies that describe the CPMSF document, reporting requirements, and maintenance responsibilities of the project owner includes:

- Policy 02 - Covenants for Permanent Maintenance of Stormwater Facilities (CPMSF)
- Policy 06 - Maintenance Access for Stormwater Management Facilities
- Policy 07 - Maintenance Responsibility for Stormwater Drainage Systems
- Policy 11 - Sediment Disposal for Detention Basins
- Policy 14 - Stormwater Enforcement Guidelines
- Policy 18 - Underground Stormwater Facility Maintenance
- Policy 19 - Underground Stormwater Facility Recordkeeping and Reporting

10.5 Facility and Access Easements

Stormwater detention easements are described in Policy 05 (included in Appendix C). There are two types of easements for stormwater detention basins and stormwater quality structures:

- Facility easements: Encompasses the entire stormwater detention basin or stormwater quality structure. Minimum size 20' x 20'.
- Access easements: Provides access to the facility easement, if the easement is not immediately adjacent to the public right-of-way. Minimum 20' wide.

A facility easement is always required. The facility easement is not allowed to encroach upon any other existing or proposed easements. The preferred name for showing the facility easement for a stormwater detention basin on plans or plats is *Stormwater Detention Basin Easement*. The

preferred name for showing the facility easement for a stormwater quality structure on plans or plats is *Water Quality Facility Easement*. A facility easement allows city engineering personnel (stormwater inspectors, grading equipment operators, stormwater monitoring personnel) to investigate and inspect the detention basin or stormwater quality structure as needed to determine proper functioning, need for maintenance, etc. In addition, minor repairwork and maintenance may be performed if there is an emergency or urgent condition, or if the property owner is negligent to perform maintenance as directed.

The preferred name for showing the second type of easement on plans or plats is *Stormwater Detention Basin 20' Access Easement* or *Water Quality Structure 20' Access Easement*. This access easement is not necessary at locations where the facility easement abuts the public right-of-way for at least 20 feet and is easily traversable by potential grading equipment such a dozer or backhoe. Otherwise, an access easement will be required.

The detention basin access easement must be shown on the plat, but does not require a recorded written legal document to be in effect. It is not necessary to build an actual road to the detention basin as part of the easement agreement (although the property owner should generally have some means of vehicle access to the detention basin for his maintenance needs). An access easement must not contain any buildings or structures, large trees or heavy shrubbery, utility poles or manholes, overhead utility lines without adequate clearance, deep ditches or channels, etc. If the property owner wishes, the access easement may contain:

- small shrubs of little or no value that can be easily removed or cleared.
- fences that can be easily removed (or ideally a gate through the fence)
- portable structures that can be quickly moved
- vehicles or equipment

The City of Knoxville is not responsible for damage to any structures, utilities or vegetation located within a facility access easement, whenever such access is deemed necessary by city inspection personnel. The City of Knoxville is not responsible for repair or replacement of structures, utilities and vegetation. A facility access easement is normally intended for heavy equipment access rather than ordinary passenger vehicle access. A city stormwater inspector will normally gain access to a detention basin or water quality facility by parking nearby.

Chapter 11
FLOODPLAIN DESIGN

11.2 Overview of Floodplains

Basic floodplain terminology is either included in Chapter 15, or is referenced in the City floodplain regulations included in Appendix B under the title Flood Damage Prevention and Control (Chapter 12 of the City Code). The 100-year flood and 500-year flood are the two principal stormwater events of interest for the management of floodplains. Proper use and preservation of natural floodplains minimizes the extent of flooding, reduces stormwater velocities and erosion, improves stormwater quality, increases animal habitats, and provides recreational opportunities near creeks and streams. These objectives are consistent with the development of greenways and bike trails near creeks, streams and lakes. Greenways and bike trails also enhance property values and improve the quality of life for citizens of Knoxville.

Land development over the years typically affects floodplains by grading encroachments, bridges, box culverts, and restricted channels. Historically, people have settled near creeks and streams for a variety of benefits, such as transportation needs, water supply, good agricultural land, etc. The acceptable limits of flooding risks were determined by trial and error over the years, with construction in the floodplains based on personal judgment concerning individual property risks versus benefits at that location only. Large floods would periodically halt development, but not to the point of restoring channel capacity or protecting natural floodplains.

FEMA (Federal Emergency Management Agency) has been given authority to set national standards and guidelines for evaluating and insuring flooding hazards. Communities which participate in the FEMA program (such as Knoxville and Knox County) are required to limit development, for the purposes of protecting public safety and preventing property damage. FEMA administers the National Flood Insurance Program (NFIP), which allows homeowners in participating communities to purchase flood insurance at a reduced cost. The minimum FEMA standard is to use the 100-year flood to define the floodplain, floodway, floodway fringe and the water surface elevations in order to protect property owners.

The City of Knoxville selected the 500-year flood as the standard regional base flood (see Section 12-4 of the Flood Damage Prevention and Control Ordinance, Appendix B) with a maximum allowable increase of 1.0 foot to determine the 500-year floodway.

See Figures 11-1 and 11-2 for cross-sections of a typical 500-year floodplain before and after development occurs. The 100-year and 500-year flood boundaries are both computed for the Flood Insurance Study (FIS) and shown on the Flood Insurance Rate Map (FIRM). MPC has zoned floodways as the F-1 Floodway District (see the Knoxville Zoning Ordinance, Article 4, Section 19 from the MPC website - http://www.knoxmpc.org). This allows developers, property owners and other interested parties to recognize approximate extents of the floodway during preliminary design and investigation. However, the floodway is more exactly defined from hydraulic model cross sections; F-1 zoning may not be precise enough to protect the floodway.

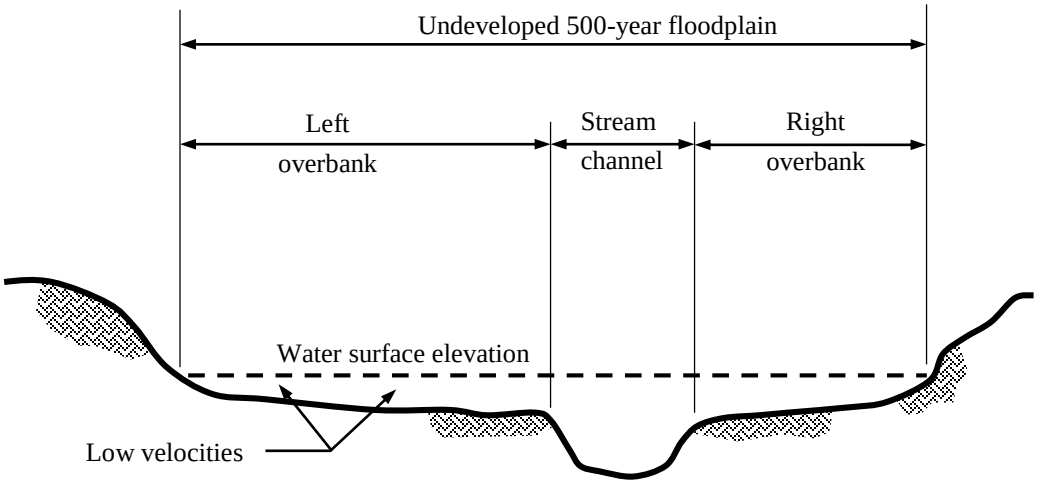

Figure 11-1
Typical Natural Floodplain

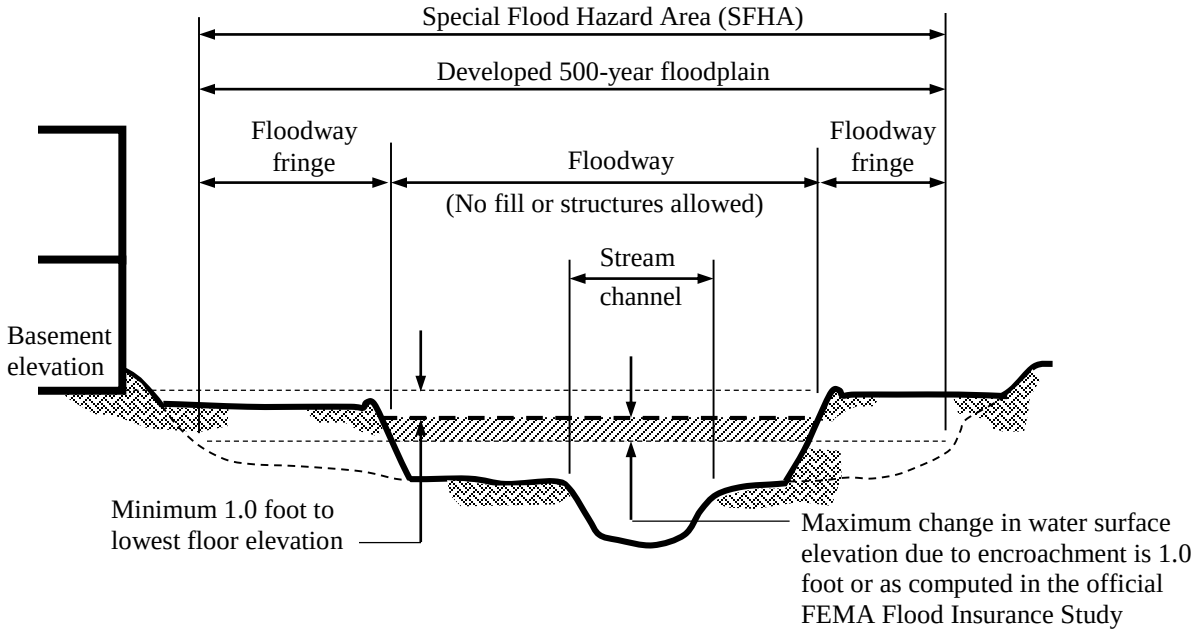

Figure 11-2
Typical Developed Floodplain

11.2 Floodplain Regulations

The essential floodplain regulations are:

1. The lowest finished floor of any structure (including basements) must be located at least 1.0 foot higher than the computed water surface elevation for the 500-year storm, and must be certified by a registered land surveyor for that exact elevation. This is accomplished by the FEMA Elevation Certificate (& Instructions), which is included in Appendix A of the Land Development Manual.
2. (Policy 20) No development, site grading, structures or other obstructions are allowed within the floodway, unless extensive modeling proves that there is no effect to the 500-year storm. Such modeling is called a "no-rise certification" and must be performed to the FEMA standards described in Policy 20.
3. (Policy 21) The no-fill line is established halfway between the 100-year floodway and the 100-year floodplain fringe. This is more strict than the requirements shown in Figure 11-2, where the developer filled the floodplain fringe up to the floodway line. The no-fill line is established in the May 2003 revision of the Knoxville Stormwater and Street Ordinance, Section 22.5-21(f), in order to better preserve the flood storage and conveyance capabilities of the floodplains.
4. A Riparian Buffer Zone is established along Regulated Waters to protect natural streams and creeks from erosion, sediment, and pollution-intensive land uses. The Riparian Buffer Zone is described in the Knoxville Stormwater and Street Ordinance, Section 22.5-40.

The City of Knoxville requires a certain level of design for stormwater calculations and flooding analyses. Stormwater design criteria are based on current scientific knowledge and engineering judgment; however, floods and flooding may occur at any time due to any number of factors beyond the reasonable control of the city. Such factors may include greater amounts of precipitation or different rainfall patterns than commonly used in design storms, saturated soil conditions, debris or blockage of key stormwater channels, high groundwater tables, etc. Stormwater calculations must be stamped and signed by a professional engineer licensed in the state of Tennessee. The professional engineer must have sufficient education and experience to perform a complete and thorough analysis. The stamp of a professional engineer is a public guarantee that his design has the highest regard for public health and safety, while minimizing damage to property.

Policy 23 lists the current status of the creeks, streams and rivers which have computed water surface elevations, floodplain widths, floodway widths, peak flows, flow velocities, etc. This information is available for review at the Engineering Department (Suite 480, City County Building) during normal business hours. The published Flood Insurance Studies can be viewed online or purchased from FEMA for a nominal cost. Other published reports can be viewed or photocopied at the MPC Library on the 4th floor of the City County Building.

11.3 Estimating Peak Flows

One way to determine floodplains and flood water surface elevations is to measure peak flows and flood stages for a stream or creek over a period of many years. Statistical methods of flood flow frequency analysis (such as Gumbel extreme values or Log-Pearson Type III) can be used to estimate the 100-year water surface elevation and stream flows at a particular gauged station, even if the period of record is much shorter than 100 years. Of course, the estimate is better with a longer period of gauged data. Any statistical method of analyzing past stream gauge data presupposes that the watershed parameters remain the same, and that the only variable is the amount and distribution of rainfall. However, most watersheds within the City of Knoxville have been extensively changed and developed during the 20th century, with higher percentages of impervious area and more stormwater drainage pipes. Statistical methods of analyzing floods are not usually applicable if the watershed had changed drastically over time.

Peak flows are usually estimated for a creek or stream based on either an empirical formula (such as the TVA and USGS regression equations) or some type of urban stormwater modeling program (such as HEC-1 or HEC-HMS). The lower limit of the TVA regression equations is 230 acres, and the lower limit of the USGS regression equations is 135 acres. See ST-13 of the Knoxville BMP Manual for formulas and additional limitations. Peak flows for watersheds may also be modeled with HEC-1 or HEC-HMS, which are freely available public-domain hydrograph programs developed by the U.S. Army Corps of Engineers (USACE). HEC-1 was originally developed over 30 years ago, and adapted to personal computers in the mid-1980s. The HEC-1 program is superceded by the newer windows-based HEC-HMS program. Both programs can be downloaded from the USACE website.

11.4 Floodplain Modeling

Floodplain modeling may be required to demonstrate that a proposed development project does not impact the floodway or cause an unacceptable flow depth or condition. After peak flows have been determined for the flood of interest, peak water surface elevations are computed with a backwater standard-step computational procedure (typically either the HEC-2 or HEC-RAS software program). Cross sections are input into the program at regular intervals along the stream, and at other locations where changes occur (such as cross-sectional area, Manning's roughness coefficients, peak flows, bridges, culverts, etc). Initial flow conditions (such as the downstream water surface elevation) are specified in order to produce a water surface profile.

The standard programs for computing water surface profiles are HEC-2 and HEC-RAS, which are freely available public-domain hydrograph programs developed by the U.S. Army Corps of Engineers (USACE). HEC-2 was originally developed over 30 years ago, and adapted to personal computers in the mid-1980s. The HEC-2 program has been superceded by the newer windows-based HEC-RAS program. Both programs are freely available public-domain software that can be downloaded from the USACE website. The design engineer can usually obtain the current HEC-2 or HEC-RAS input information from the Knoxville Engineering Department or from TVA, and then add cross-sections to the model in order to determine potential effects of encroachment or bridge crossings. In some cases, the design engineer may have to extend the floodplain model upstream along the main branch or a side branch.

11.5 Floodway and Floodplain Revisions

Floodplain reports and investigations must meet the requirements outlined in the Chapter 12 of the municipal code (see Appendix B) and in the Knoxville Zoning Regulations (available from MPC). No building or construction permits will be issued until the plans contain a certification stating that there is no increase to the 500-year flood water surface elevations. The City Engineering Department must approve any floodplain reports and investigations prior to approval of construction plans. Typical information will include:

- Topographic maps to scale, with accurate and current data that includes all structure locations and finished floor elevations.
- Profiles of the creek or stream, with all bridge and culvert crossings, water surface elevations, and cross-section locations.
- Representative cross-sections for each section of the creek or stream.
- Basis for determining peak flows, including a map of the watershed boundary with subareas delineated.
- Complete input data used to compute the water surface profiles (typically HEC-2 or HEC-RAS programs) in printout form and as electronic files.
- Summary output tables and charts, with computed water surface elevations, energy grade lines, velocities, cross-sectional flow areas, etc.

Floodplain revisions may be necessary if any features associated with the floodplain are changed by development or transportation work, such as grading encroachments or bridge improvements. Any changes to the floodplain or floodway must be fully documented to FEMA (and the City of Knoxville) using one of the following methods:

- Conditional Letter of Map Amendment (CLOMA) -- A letter from FEMA stating that a proposed structure or parcel of land, not having been elevated by fill, would not be inundated by the base flood.
- Conditional Letter of Map Revision (CLOMR) -- A letter from FEMA stating that a proposed structure or parcel of land would not be inundated by the base flood, due to channelization projects, bridge and culvert construction of bridges or culverts, floodway alterations, or other impacts other than fill placed outside of the regulatory floodway.
- Conditional Letter of Map Revision Based on Fill (CLOMR-F) -- A letter from FEMA stating that a proposed structure or parcel of land, having been elevated by fill, would not be inundated by the base flood.
- Letter of Map Amendment (LOMA) -- A letter from FEMA stating that an existing structure or parcel of land, not having been elevated by fill, would not be inundated by the base flood.
- Letter of Map Revision (LOMR) -- A letter from FEMA stating that an existing structure or parcel of land would not be inundated by the base flood, due to channelization projects, bridge and culvert construction of bridges or culverts, floodway alterations, or other impacts other than fill placed outside of the regulatory floodway.

- Letter of Map Revision Based on Fill (LOMR-F) -- A letter from FEMA stating that an existing structure or parcel of land, having been elevated by fill, would not be inundated by the base flood.

Application forms, instructions, and certificates can be downloaded from the FEMA website at: http://www.fema.gov/nfip/forms.shtm Application forms and certificates must also be submitted to the Stormwater Engineering Division as part of the plans review process.

The Knoxville Engineering Department manages and regulates floodplains/floodways in order to participate in the NFIP, which will allow citizens and businesses to obtain flood insurance at reduced rates. Currently the City of Knoxville is a Class 9 community, which allows a 5% reduction in flood insurance rates. The Community Rating System (CRS), which is described on the FEMA website at http://www.fema.gov/nfip/crs.shtm , allows each community to receive credits in 18 different categories related to floodplain management and maintenance, zoning and mapping regulations, public involvement/education, and major drainage improvements and public works.

Chapter 12
STREET DESIGN CRITERIA

12.1 Overall Design Guidelines

The minimum design standards for streets and roads in the City of Knoxville are contained in the Minimum Subdivision Regulations (MSR), which are maintained by MPC as a joint set of standards for Knoxville and Knox County. Public streets and highways must be designed in accordance with the most current version of the book "A Policy on Geometric Design of Streets and Highways", published by the American Association of State and Highway Transportation Officials (AASHTO) and the geometric design standards contained in Tennessee Department of Transportation (TDOT) standard drawings and details.

Public streets and roads are grouped into seven functional classifications as specified by MSR Section 62. The Major Road Plan, maintained by MPC, shows the functional classification of all existing streets and roads. In addition, MPC also keeps a list of proposed transportation improvements as a guide for laying out new streets and roads. New streets and roads will be analyzed by MPC to determine functional classification, necessary width for right-of-way, and additional design requirements based on traffic volumes and patterns, future growth projections, or scenic/aesthetic considerations. The seven types of public streets and roads are:

1. Expressway *(MSR 62-31)*
2. Major Arterial *(MSR 62-32)*
3. Minor Arterial *(MSR 62-33)*
4. Major Collector *(MSR 62-34)*
5. Minor Collector *(MSR 62-35)*
6. Local Street *(MSR 62-36)*
7. Alley *(MSR 62-37)*

In general, most new streets and roads that are constructed as part of a development project are either collector or local streets. On occasion, a developer may be required to improve or extend a portion of an arterial street. Arterial streets and expressways are usually state routes and must be designed according to TDOT standards. Therefore, this chapter will focus mainly on the design of collector and local streets for subdivisions, using the MSR as the principal reference.

Alleys, designed on a case-by-case basis as either one-way or two-way, are considered to be a secondary means of access to the back or side of a property that has principal access elsewhere. A typical use of an alley is to provide access to the back of a building for delivery trucks, or as a route to install or maintain public utility infrastructure. Alleys are not intended for use in new subdivisions, but are most commonly found in older historic neighborhoods. Section 17-243 of the City Code recommends that one-way alleys should run east-to-west or north-to-south, unless the Engineering Department rules that a different direction is more appropriate or safer.

In addition to the seven types of public streets, the developer may choose to construct a joint permanent easement (JPE) which functions as a private street. If it serves or is adjacent to more than 5 lots, then the JPE actually receives an official street name and must satisfy most of the design requirements for a public street. However, the City of Knoxville will <u>not</u> accept the JPE

for public ownership, and a homeowners association or other legal entity must accept responsibility to maintain and repair a JPE to the satisfaction of MPC and the City of Knoxville.

12.2 Acceptance as Public Streets

The City of Knoxville will only accept streets into the public street system that are constructed to city standards for the actual functional classification (as specified in Section 12.1). Private roads must be designed and constructed to JPE standards as specified in the Minimum Subdivision Regulations. Even if a private road is constructed to JPE standards, however, it will be very difficult for the private road to be accepted as a public street at a later time.

When a public street is accepted, it is then maintained by the City of Knoxville. Private roads must be maintained by the property owners served by the private road, or another legal entity which has been assigned responsibility at the time of design and construction. The city government is often asked to take over and maintain private roads. However, the type of problems and considerable expenses involved for the property owners to process these requests usually makes it impractical for a private road to be upgraded to the standards of a city public street. Consequently, most requests for the City Engineering Department to accept a private road are usually dropped and not pursued further. The following three basic requirements are necessary to approve a private road as a public street.

1. Right-of-Way Dedication

The right-of-way to be dedicated must comply with the Major Road Plan as maintained by MPC. Within the City of Knoxville, the minimum right-of-way width for local streets is 50 feet. Private roads almost always have right-of-way widths less than 50 feet. In many of these cases, additional right-of-way cannot be dedicated without encroaching on buildings, sheds, trees, utilities, drainage structures or other improvements.

2. Acceptable Roadway Construction

The property owners must submit proof to the City Engineering Department that the current pavement section is constructed to public road standards. Even if the existing private road meets the pavement thickness standards, additional construction will usually be necessary to increase the pavement width. The pavement investigation and proposed roadway improvements must be analyzed and designed by a qualified professional engineer registered in the state of Tennessee, with adequate education and experience to conduct this type of work.

3. New Survey Plat

A new property survey reflecting the new public right-of-way, and all changes to the affected properties, must be approved by the Metropolitan Planning Commission and recorded with the Knox County Register of Deeds. The new survey plat must be prepared by a registered land surveyor currently licensed to practice in the state of Tennessee. Within subdivisions, the entire subdivision unit must be included on the plat. When the right-of-way to be dedicated must be widened to 50 feet, property boundaries and lot areas are affected. New easements are generally required. New variances may be needed for minimum lot areas, setbacks, zoning, etc. Each property owner must sign a "Certificate of

Ownership and General Dedication" statement and have his signature notarized on the survey plat.

12.3 Horizontal Geometry

Horizontal geometry requirements for city streets and roads are described in MSR Section 62 and summarized in Table 12-1 for the seven functional classifications. In addition, MSR Section 62 contains criteria for designing cul-de-sacs, intersection spacing, vertical grades, etc. For Table 12-1, the minimum allowable horizontal radius for local streets depends on whether the local street has a total length of 1000 feet or greater. The minimum design speed for local streets in residential subdivisions is 30 miles per hour or as designated by the Engineering Director (see Section 22.5-35 of the Knoxville Stormwater and Street Ordinance).

Minimum right-of-way widths are specified in order to accommodate future road improvements, sidewalks, utility installation, streetlights, bicycle trails, greenways, etc. As a brief summary of horizontal curve design, the following equations are listed:

Δ = Deflection angle (degrees)

R = Centerline radius, or radius of curvature (feet)

L = Length of curve (feet) = Δ (R) (2π / 360º)

D = Degree of curve (degrees) = 5729.58 / R

T = Tangent of curve (feet) = R tan (Δ)

C = Chord, or long chord (feet) = 2 R sin (Δ/2)

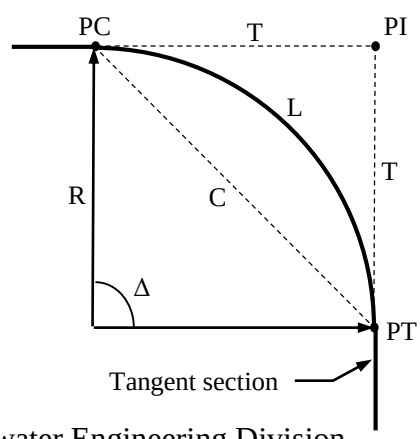

Horizontal curve information is required in order for the Stormwater Engineering Division to review and approve site development plans. For new public streets and roads, separate roadway drawings must be submitted in a standardized format that can be easily reproduced in various formats for city and county records. In many cases, it is customary to measure the length of centerline in units of 100 feet, called stations. Also, the following points are usually represented and labeled on roadway drawings:

PC = point of curvature (the beginning of a curve)
PI = point of intersection (where two tangent sections would meet, if extended)
PT = point of tangency (the end of a curve)

Additional requirements for horizontal design include:

- (MSR 62-81) Streets within a subdivision shall usually have 90º intersections whenever possible. The minimum intersection angle is 60º for cases where topography imposes a severe restraint, and very few traffic movements are expected in the direction of the acute angle turn.
- (MSR 62-84) Minimum radius for a curb or the edge of pavement, at the corner of a property with residential or agricultural zoning, shall be 25 feet for angles of 90º or less. Minimum radius of a curb shall be 75 feet for angles greater than 90º.

- (MSR 62-85) Minimum radius for a curb or the edge of pavement, at the corner of a property with office, commercial or industrial zoning, shall be 75 feet for all angles between 60º and 120º.

Table 12-1

Horizontal Geometry for Streets

Functional Classification		Minimum ROW width	Minimum pavement width	Minimum centerline radius	Minimum length for tangents - reverse curve	Minimum length for tangents - broken back curve	Minimum intersection spacing
Section from MSR:		*62-40*	*62-50*	*62-70*	*62-73*	*62-74*	
Expressway		*	*	*	*	*	*
Major Arterial		*	*	920'	150'	*	400'
Minor Arterial		*	*	920'	150'	*	400'
Major Collector		*	*	560'	100'	175'	300'
Minor Collector		70'	32'	400'	75'	175'	300'
Local Street	L >	50'	26'	250'	50'	150'	125'
	L <	50'	26'	100'	50'	150'	125'
Alley		**	**	**	**	**	---

* - Consult Major Road Plan, MPC growth planning studies, City Engineering Dept and TDOT.
** - Designed on a case-by-case basis.

12.4 Vertical Geometry

Vertical geometry requirements for city streets and roads are described in MSR Section 62 and summarized in Table 12-2 for the seven functional classifications. The major concerns for vertical geometry are ensuring adequate sight distance, reasonable grades for accelerating and decelerating, and relatively flat grades at intersections for stopping and turning. Vertical geometry is based on parabolic curves rather than circular curves. The following equations are listed as a brief summary of vertical geometry.

LVC = Length of vertical curve (stations)

G_1 = Approach grade (percent)

G_2 = Exit grade (percent)

A = Rate of change (percent per station) = $(G_2 - G_1) / LVC$

E = External of vertical curve = $0.125 (LVC) (G_2 - G_1)$

Y = $(A/2) X^2 + G_1 X$ + Elevation of PVC

Y_{MAX} or Y_{MIN} occurs when: $X = G_1 / A$

K = $(100 LVC) / A$

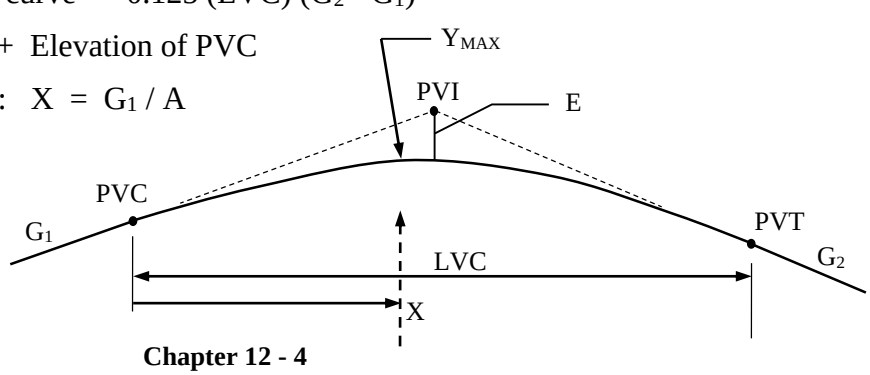

Table 12-2
Vertical Geometry for Streets

Functional Classification	Maximum grade	Minimum grade	Minimum K for vertical curves	Typical cross slopes
Section from MSR:	*62-60*	-----	*62-72*	-----
Expressway	5%	1%	*	*
Major Arterial	6%	1%	50	*
Minor Arterial	6%	1%	50	*
Major Collector	8%	1%	50	2%
Minor Collector	10%	1%	50	2%
Local Street	12% #	1%	25 #	2%
Alley	**	**	**	**

* - Consult Major Road Plan, MPC studies, City Engineering Dept and TDOT.
** - Designed on a case-by-case basis.
\# - MPC and Stormwater Engineering Division may recommend approval for variance up to 15% on local streets.

Collector streets and local streets should be designed with a crown section of 2% cross slope. In other words, each half of the street should drain towards the curb and gutter without crossing the centerline of the street. This necessitates that a storm drainage system must be designed to drain both sides of the street, with careful attention to street intersections.

Superelevation of a minor collector street or a local street for a subdivision is seldom necessary. The tradeoff of achieving higher design speeds (through the use of superelevation) is usually not worth the design problems of ensuring adequate drainage on each side of the street, particularly if there are many entrances and driveways along the street. In addition, the use of superelevation on local streets may encourage faster driving through residential neighborhoods. However, the design engineer should be prepared to properly design any street superelevations when requested by MPC or Stormwater Engineering Division. Superelevation standards can be found in both the AASHTO design policy ("Green Book") and on TDOT standard detail drawings.

A local street must have a minimum tangent grade of 50' length when tying into another street. The tangent grade should preferably be 1% with a maximum value up to 2%. The minimum tangent grade is measured from the closest edge of travelway of the intersected road. Vertical street geometry must be coordinated with horizontal street geometry in order to ensure adequate sight distances as described in Section 12.5. Broken-back vertical curves and compound vertical curves should be avoided.

12.5 Sight Distance

Sight distance is an essential safety element in the design of streets, roads, driveways and entrances. The entire process of driving relies on a combination of adequate vision and lighting, driver reactions, easily recognizable situations, and standard traffic signs and signals. While there are equations and formulas for computing both horizontal and vertical sight distances, it is usually difficult to quantify and measure these values if a horizontal roadway curve and vertical roadway

curve occur at the same location. Horizontal curves and vertical curves should be separated whenever possible. An example of bad street design is if a horizontal curve begins or ends near the crest of a vertical curve (so that the driver does not see the change in alignment).

Each driveway, entrance, and intersecting street must be checked by the design engineer to ensure that the driver of the stopped vehicle (typically several feet from the front or back bumper) can adequately see both ways. Each check can be done by formulas and equations, by drawing horizontal sight distances on the plan drawings, or by carefully visualizing a driveway or entrance. The use of 3-dimensional CADD software for street design is now commonplace; this will also assist the design engineer in verifying sight distances.

Horizontal sight distance for street design is usually satisfied by the minimum centerline radius for each functional street classification (shown in Table 12-1), provided that standard building setbacks and right-of-way clearances are followed. However, there are many other things that may interfere with horizontal sight distance such as: cut slopes, trees, tall grass, signs, billboards, parked cars, retaining walls, fences, or bridge overpasses.

Vertical sight distance is usually satisfied by the minimum K values found in Table 12-2 for each functional street classification. Vertical sight distance is actually two categories: stopping sight distance and passing sight distance. Passing sight distance, which is the distance needed to overtake and pass a vehicle headed in the same direction, is usually not applicable on urban streets since:

- Most vehicles do not achieve "highway speeds" on city streets.
- Alternate routes are more commonly available within the city for impatient drivers.
- Within the city limits, a slower vehicle may turn left at almost any driveway or street.

Stopping sight distance is shown in Table 12-3 for various travel speeds and assuming wet pavement conditions. Stopping distance is shorter when traveling uphill and longer when traveling downhill. The design engineer must coordinate all elements of street and roadway design during design, and conduct a thorough review after design is completed. Geometric design must be coordinated with grading and earthwork. Drainage design must be compatible with the geometric design. Some basic rules for coordinating geometric design include:

- Avoid a horizontal curve at the crest of a vertical curve.
- Avoid a horizontal curve at the bottom of a long vertical grade.
- Do not make an uncomfortable vertical profile by using a series of up-and-down curves.
- Do not use compound vertical curves or short tangent sections between vertical curves.
- Avoid a vertical curve at the beginning or end of a horizontal curve.

Table 12-3
Stopping Sight Distance
(f = wet pavement friction value)
Taken from "A Policy on Geometric Design of Highways and Streets" (AASHTO)

Actual Travel Speed	Reaction Distance *	F	Braking Distance on Level Ground **	Stopping Sight Distance on Level Ground		Stopping Sight Distance for Uphill Grades		Stopping Sight Distance for Downhill Grades	
				Computed	Typical Rounded Values	Computed		Computed	
						+5%	+10%	-5%	-10%
mph	feet	---	feet	feet	feet	feet	feet	feet	feet
20	73	0.	33	107	125	103	100	112	118
25	92	0.	55	147	150	140	135	155	166
30	110	0.	86	196	200	185	177	210	230
35	128	0.	120	248	250	233	221	269	299
40	147	0.	167	313	325	291	274	345	389
45	165	0.	218	383	400	353	330	425	487
50	183	0.	278	461	475	422	392	517	600
55	202	0.	336	538	550	490	454	605	706
60	220	0.	414	634	650	573	528	721	852
70	257	0.	584	840	850	752	687	967	1165

* - Reaction distance is based on 2.5 seconds to recognize and react to a stopping situation.
** - Braking distance is based on the equation $D = V^2 / 30 (F \pm G)$

D = braking distance (feet)
V = travel speed (mph)
F = coefficient of friction
G = longitudinal grade of roadway (feet/feet)

The following diagram illustrates the "Visibility Triangle", a further requirement for sight distance that is in the City of Knoxville Zoning Ordinance, Article V, Section 6(C). On any corner lot where front and side yards are required, there shall be no wall, fence, sign, structure, plant growth or any object, whether movable or stationary, which obstructs the vision at elevations between 2 ½ feet and 10 feet above the crown of the adjacent roadway within the "Visibility Triangle".

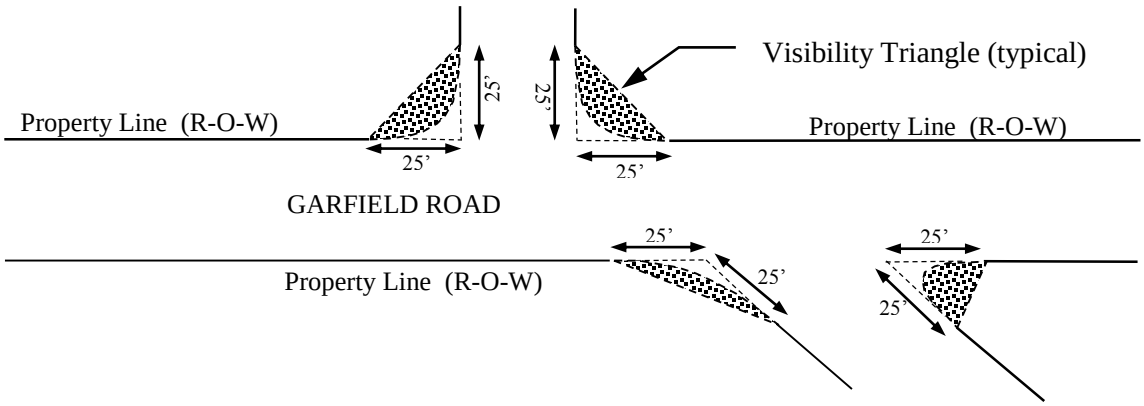

On any property which is required to have a front yard (except for the corner lot as described with the Visibility Triangle), there shall be no fence, wall, hedge or yard ornament that materially impedes vision across the front yard above the height of 3 ½ feet, in accordance with in the City of Knoxville Zoning Ordinance, Article V, Section 6(C).

12.6 Pavement Sections

Concrete curb shall generally be 6" high, with or without integral concrete gutters. In most cases, integral curb and gutter sections shall have a total width of 30" consisting of a 24" gutter, unless a different type of curb has been used in the immediate vicinity of the project. Traversable curb and gutter may be appropriate in some locations such as residential subdivisions. New residential subdivision streets may be constructed with standard extruded curbing with the approval of the Engineering Department. The aggregate base must extend at least 2 feet beyond the back of curb, in order to ensure an adequate foundation for the curb and gutter.

	Asphalt Pavement			
	Aggr. base	Binder	Leveling	Surface
Local street	8"	2.5"	-----	1.5"
Collector street	10"	3"	-----	2"
Arterial street	12"	3"	1.5"	1.5"
Industrial / Commercial	14"	3.5"	2"	1.5"

	Concrete Pavement	
	Aggr. base	Surface
Local street	4"	5"
Collector street	4"	6"
Arterial street	4"	8"
Industrial / commercial	4"	9"

Asphalt and concrete pavement materials must be tested to ensure adequate strength properties and proper density (as specified in the Knoxville Technical Specifications).

Material	Gradation	Knoxville Technical Specifications
Mineral aggregate base	Class A Grade D crushed stone	TS-05 (TDOT 903.05)
Binder asphalt course	Grading B asphalt	TS-09
Leveling asphalt course	Grading C asphalt	TS-09
Surface asphalt course	Grading D asphalt	TS-10
Surface concrete pavement	3500 psi 28-day compr. strength	TS-11
Prime coat and tack coat	Emulsified or cut-back asphalt	TS-06 and TS-07

12.7 Traffic Considerations

MPC maintains the Major Road Plan to ensure that traffic and street improvements will benefit the overall community. MPC coordinates review of conceptual and preliminary plans with many agencies, such as the Knoxville Police and Fire Departments, so that changes to traffic or street patterns will not adversely affect emergency response services. As part of the regional program called "Nine Counties - One Vision", MPC is also involved in conceptual planning for alternative forms of transportation (bus, transit, bicycles, pedestrians). The Knoxville Regional Transportation Planning Organization (TPO) serves the areas covered by Knox County and Blount County to analyze regional transportation planning. See the following websites for additional information:

http://www.knoxmpc.org/ Metropolitan Planning Commission (MPC)

http://www.knoxtrans.org/ Knoxville Transportation Planning Organization (TPO)

http://www.ninecountiesonevision.org/ Nine Counties - One Vision

http://www.knoxmpc.org/locldata/stats.htm Traffic counts, travel analyses, commuter patterns

The Knoxville Zoning Ordinance defines a major traffic generator as a facility that is required to have 400 or more parking spaces. The number and type of parking spaces are described in Article V, Section 7 (Minimum offstreet parking, access and driveway requirements). Any development projects which qualify as a major traffic generator shall submit a traffic study report as described in Policy 01 in Appendix C. Driveways and entrances shall meet the requirements of Policy 01 (Access Control for Traffic and Driveways).

12.8 Traffic Signs

The developer/contractor is required to correctly install all traffic signs necessary for the safe and effective control of traffic. The site development plans must include the types and locations of each sign, standard detail or reference, mounting height, and orientation. The primary reference for traffic signs and markings is the Manual on Uniform Traffic Control Devices (MUTCD), with a particular emphasis on regulatory signs (such as Stop signs, R1-1, and One-Way signs, R6-1) and warning signs (such as No Outlet signs, W14-1). See the City of Knoxville Technical Specification TS-63 (on the Civil Engineering Division webpage) for traffic sign installation and materials, or consult TDOT Standard Specifications Section 916 for installation and materials.

The developer/contractor may contact the City Sign Shop (Traffic Engineering Division) in order to purchase traffic signs and installation hardware. Or alternatively, the developer/contractor may arrange for the City Sign Shop to install traffic signs at a reasonable cost.

Temporary traffic signs and temporary pavement markings, if necessary during construction, must meet the requirements that are listed in City of Knoxville Technical Specification TS-34. *A Construction ROW Permit* and a *Temporary Traffic Control Permit* must be obtained from the Civil Engineering Division for work that occurs within the street right-of-way.

12.9 Coordination With Utilities

Installation of utilities must be carefully coordinated with all aspects of site construction, and especially street construction. New streets and rights-of-way are required to have a utility strip outside of the pavement section, so that routine utility installation and repair does not impact the pavement structure and traffic. Utilities should be installed underground whenever possible (such as telephone and electric). Requirements for utility plans are described in MSR Section 43-75. MSR Section 69-10 requires that the interior and exterior lot lines of a subdivided property shall have a standard 10' wide utility/drainage easement. Interior easements shall be centered on interior property lines, so that the width will be 5' on each side of the property line.

The locations, sizes, and capacities of utility lines and appurtenances must be shown on the plan drawings in order to minimize utility conflicts, coordinate construction work, arrange for the proper easements, and to ensure adequate materials. Appurtenances such as valves, fire hydrants, manholes, cleanouts, and pump stations must be located in areas that are easily accessible and identifiable. Utility easements must be labeled with accurate dimensions and locations. Sanitary sewer lines must include a profile showing invert elevations and connections. All excavations should be coordinated with "Tennessee One Call" (1-800-351-1111) at least 2 working days prior to digging.

The design engineer should carefully examine the proposed layout of utilities to avoid interferences. Electrical and water connections may be needed for outdoor applications. Electrical connections are required for streetlights, traffic signals, signs or security lights. Water may be needed for lawn irrigation sprinklers, fountains, or landscaped waterfalls/ponds. KUB looks at utility plans as part of the building permit review and not during grading permit review.

Any excavation, tree trimming, construction or installation within public right-of-way must follow the Utility Maintenance & Construction Policy, which is available on the Civil Engineering Division webpage. A *Construction ROW Permit* must be obtained at least 48 hours in advance of the construction activity; a *Temporary Traffic Control Permit* may also be needed. A copy of the ROW Construction Permit is included in Appendix A.

12.10 Streetlights

Streetlights are necessary to improve public safety for pedestrians and vehicles. The City of Knoxville pays for the installation and maintenance of streetlights, but the developer is required to show approximate locations and type of streetlight on the site development plans for city approval. Maximum streetlight spacing on local streets and within subdivisions is typically 200 feet, with a typical height in residential areas of 14 to 35 feet. Streetlights should be located at intersections in such a manner to illuminate intersections, stop signs and curves.

Design and installation of streetlights is performed by KUB (or another utility district if appropriate) and must be coordinated with the Stormwater Engineering Division. Streetlights are often specified with underground electric connections for subdivisions, and a developer has several choices of decorative fixtures and poles that can be selected. Or streetlights may be mounted on existing electrical poles. High-pressure sodium lights are required on city streets due to energy efficiency and ease of maintenance.

Pictures and designs of decorative streetlights can be viewed at the KUB offices or the Stormwater Engineering Division offices. Other streetlight types may be selected if any additional installation/construction costs are borne by the developer. Typical information for streetlight design includes:

1. Horizontal and vertical geometry of the street centerline, including curve data.
2. Typical cross section of the street that shows the proposed streetlight (pole and luminaire) with respect to the edge of pavement, curb and sidewalk.
3. Character and spacing of existing streetlights on nearby streets and throughout the neighborhood.
4. Locations of the proposed streetlights, with average spacing computations.
5. Mounting height, foundation/base, and type of pole.
6. Luminaire size, ASA type, and initial lumen rating (with photometric design data).
7. Average horizontal footcandle level (with minimum and maximum values also noted).

Streetlight poles shall not be located closer than 2 feet to the face of curb, or closer than 4 feet to the edge of pavement. Do not locate streetlight poles at locations with a high potential for collisions. Typically streetlight poles may be metal, fiberglass, concrete or wood poles with a luminaire mounting height between 10 feet and 18 feet. Poles will have a handhole for access to wiring. Poles may be direct burial (4 ft butt) or designed with a flange base for mounting on a concrete foundation.

All installations shall conform to the requirements of the latest edition of the National Electrical Code (NEC), the Illuminating Engineering Society standards, and the rules of the Knoxville Utilities Board (KUB). Customers shall notify "Tennessee One Call" (1-800-351-1111) prior to any excavation for the proposed streetlight installation.

12.11 Standard Details and Technical Specifications

The use of standard details and specifications is encouraged in order to promote a safe level of performance for all structures and roadways. The Civil Engineering Division maintains standard details to be used for construction projects within the City of Knoxville; see the Civil Engineering Division webpage. An excellent source of standard details are the TDOT Standard Roadway and Structure Drawings, which can be puchased from TDOT headquarters in Nashville (approximate cost $100) or downloaded from the TDOT website described in Chapter 3.

The minimum properties and methods of street construction must match the latest version of the City of Knoxville technical specifications. The Civil Engineering Division maintains the Knoxville standard specifications for use with all city construction projects, which can be downloaded from the Civil Engineering Division webpage. The City of Knoxville technical specifications are not meant to cover every situation or design need, but they address general requirements for which additional drawings, specifications, details, plans and cross sections must be prepared and stamped by a design professional engineer registered in the state of Tennessee.

Chapter 13
CONSTRUCTION ADMINISTRATION

13.1 Preconstruction Assistance Conference

A preconstruction assistance conference is required, prior to the issuance of a Site Development Permit, for all projects for which a construction bond has been collected by the Stormwater Engineering Division during the design review process. The construction bond (also called a Performance and Indemnity Agreement) certifies that the specified portion of the project will be constructed in agreement with city standards and regulations. In addition, a preconstruction assistance conference may be requested by Stormwater Engineering Division personnel for projects with unusual requirements or conditions that may require extra care or some measure of environmental sensitivity.

The preconstruction assistance conference may take place either in the Stormwater Engineering Division offices (4th floor of the City County Building) or in the field, depending on the type of construction and the nature of the project site. The Stormwater Engineering Division will coordinate the time and location of the preconstruction assistance conference with the developer and contractor. A typical meeting will include: review of erosion and drainage concerns, as-built requirements, procedure for renewing construction bonds, inspection schedules, etc.

13.2 Required Submittals and Notifications

In general, the contractor/developer is not required to make regular submittals or progress reports to the Stormwater Engineering Division inspectors. However, the contractor is encouraged to notify the inspector of significant changes to the construction schedule. A construction schedule is recommended as part of the erosion and sediment control plan (ESCP) narrative as described in Section 7.3. A construction schedule, for the purposes of the ESCP narrative, should indicate the duration of activities such as initial placement of erosion controls, clearing and grubbing, earthwork, trenching, drainage installation, and seeding/sodding.

Certain types of construction activities will require submittals and field inspections by Stormwater Engineering Division personnel. Submittals and field inspections help to ensure that streets, sidewalks, graded slopes, streetlights, detention basins and drainage systems will meet city standards for safety and durability. Inspection activities for a typical project are listed below (assuming that the project will have asphalt pavement for any proposed public streets):

<u>Pavement Subgrade and Aggregate Base</u>

- Submit aggregate gradation report (in TDOT format) at least 2 days prior to placement.
- Notify city inspector at least 2 days prior to construction.

Asphalt Binder and Asphalt Surface Coat

- Submit an asphalt job mix formula (in TDOT format) from approved asphalt plant at least 2 days prior to placement.
- Notify city inspector at least 2 days prior to construction.
- Submit density and gradation reports from materials analysis laboratory as required.

Curbs and Sidewalks

- Notify city inspector at least 2 days prior to placement for inspection of lines and grades. Methods, materials and locations for construction and expansion joints, and steel reinforcement where shown on plans, should also be reviewed.

Retaining Wall Footers

- Notify city inspector at least 2 days prior to pouring concrete for inspection of lines and grades. Other review items include adequate foundation conditions, joints, and correct amount of steel reinforcement.

Storm Drain Pipes Within the Right-of-Way

- Notify city inspector at least 2 days prior to backfilling. Manufacturer's certificates may be required by the city inspector for materials which appear to be substandard.

Water Quality Structures

- Submit manufacturer's specifications for the structure at least 7 days prior to backfilling for final approval. Specifications must agree with approved construction plans and any other documents (such as a Special Pollution Abatement Permit or a NDPES application).
- Notify city inspector at least 2 days prior to installation.

Other types of construction, located on private property and not affecting the public interest, may be spotchecked by the Stormwater Engineering Division personnel for general conformance with the plans. However, it is not the Stormwater Engineering Division's responsibility to inspect constructed project work on private property.

Retaining walls will not be allowed on public right-of-way as part of a site development project, and any retaining walls inadvertently built on public right-of-way must be completely removed. See Policy 10 in Appendix C for more information concerning retaining walls.

13.3 Erosion and Sediment Control

Proper sequencing of construction activities is essential to maximize the effectiveness of erosion and sediment control measures. A construction schedule is recommended as part of the erosion and sediment control plan (see Section 7.3), with typical schedule formats described in AM-02 of the Knoxville BMP Manual. The following erosion control activities provide a simplified outline that applies to the initial phase of most site developments:

1. Install a stabilized construction entrance and exit.
2. Flag and mark the project boundaries. Flag the construction buffer zones, sediment traps or basins, construction storage areas, and equipment travel lanes.

3. Clear a path for the installation of perimeter erosion and sediment controls.
4. Install perimeter erosion and sediment controls. Evaluate effectiveness and adjust as needed.
5. Excavate any temporary sediment traps or sediment basins. For most small project sites, the proposed detention basin will also function as a temporary sediment basin with slight modifications.
6. Install outlet structures and channel stabilization measures for temporary sediment traps or sediment basins. Install slope stabilization measures such as grass sod or turf reinforcement mats.
7. Proceed with site grading and construction work. Establish either temporary or permanent vegetation on all disturbed areas within 14 days of completion of grading at the disturbed area. Provide temporary seeding on temporary soil stockpiles.
8. The Stormwater Engineering Division will conduct routine inspections for erosion and sediment control throughout the construction phase. The Stormwater Engineering Division will also respond to complaints of erosion or sediment. In addition, TDEC may investigate complaints of erosion or sediment anywhere within the City of Knoxville.

A final as-built inspection and review will be performed at the project site prior to release or reduction of a construction bond. See Appendix A for the Final Site Inspection Checklist and for the Development Certification Checklist. All disturbed areas must support a thick and healthy stand of vegetation, with no evidence of erosion or slope instability.

Throughout the construction phase of a project, erosion and sediment control measures are required to be inspected at least weekly and also after any significant rainfall event. During periods of prolonged rainfall, the erosion and sediment control measures should be inspected daily. It is recommended that an inspection checklist, either generic or project-specific, should be used to perform the inspections and to record any needed maintenance tasks. See Appendix A for a generic erosion control inspection checklist.

Failure to install or maintain the required erosion and sediment control measures will result in enforcement action from the Stormwater Engineering Division inspectors. Authority for the enforcement of erosion and sediment controls is provided by Section 22.5-8 of the Knoxville Stormwater and Street Ordinance. Any person violating the provisions of the ordinance may be assessed a civil penalty of not less than $50 per day and not more than $5000 per day for each day of violation, in addition to any damages or expenses incurred by the City of Knoxville in controlling or investigating violations.

13.4 Development Certification

An approved development certification is one of the items required prior to the release of any bond (also called Performance and Indemnity Agreement) that has been collected by the Stormwater Engineering Division. The development certification is issued by the Stormwater Engineering Division after all construction has been completed in accordance with the design plans and requirements of the Knoxville Stormwater and Street Ordinance. An accurate as-built drawing must be submitted and sealed by the design engineer.

Appendix A contains a site review checklist for final approval of a constructed site development project and the associated as-built drawing. Plats, maintenance covenants, and easements are field-checked to ensure that the locations are approximately correct. Sizes and configurations for detention basins, oil/water separators or other water quality structures are inspected. Adequate vegetation cover is required for all areas disturbed by construction activity. Due to the difficulty of establishing vegetation on sloped surfaces and grades (such as detention basins), it is highly recommended that grass sod or turf reinforcement mats should be used for these areas.

Every as-built drawing must be properly certified by the appropriate design professional engineer and the registered land surveyor. The land surveyor must provide certification as shown to the right, in addition to the surveyor's seal with an original signature and date across the seal

> I hereby certify that I have surveyed the land boundaries and easements shown hereon in accordance with the accuracy requirements for a Category I survey and that the ratio of precision of the unadjusted survey is not less than 1:10,000.
>
> I further certify that I have located all natural and manmade features shown hereon in accordance with the current Standards of Practice as adopted by the Tennessee State Board of Examiners for Land Surveyors. I certify the location, elevation, and description of these features.
>
> Printed Name Date RLS No.

13.5 Bond Release

Minimum requirements for release of the performance bonds include:

1. Development Certification Approval -- Follow checklist in Appendix A for submittal of as-built drawings to the Stormwater Engineering Division by the design engineer as required by the Knoxville Stormwater and Street Ordinance in Section 22.5-28(e).
2. Recorded Documents -- All necessary survey plats, maintenance covenants (CPMSF), and easements must be recorded at the Knox County Register of Deeds by following official procedures. It is the responsibility of the property owner to see that all necessary documents are properly recorded, including easements for detention basins, oil/water separators and all other stormwater facilities.
3. Good Cover of Vegetation -- All areas disturbed by construction activity must be stabilized for the purpose of erosion control. Due to the difficulty in establishing vegetation on sloped surfaces, it is highly recommended that detention basins should have grass sod or turf reinforcement mats on all slopes.

Basic timetables for bond extension/reduction/release are shown in Figure 2-4. The contractor or developer should contact the Stormwater Engineering Division at least 30 days prior to the bond expiration date in order to arrange a site inspection and to discuss requirements for bond release. As a courtesy, the Stormwater Engineering Division may send a notice letter to both the Principal and Guarantor 60 days prior to bond expiration. The Stormwater Engineering Division may send a second courtesy letter 21 days prior to bond expiration, with a more urgent warning. The Principal is required to notify the Stormwater Engineering Division of his intentions at least 14 days prior to the bond expiration with regard to the specific form of surety and the proposed Guarantor. Original signed documents must be submitted to the Stormwater Engineering Division at least 10 days prior to the bond expiration, in order to forestall the initiation of collection procedures by the Stormwater Engineering Division.

Chapter 14
SITE CONSTRUCTION ACTIVITIES

14.1 Construction Schedules and Phases

A construction schedule should generally be prepared as part of the erosion and sediment control plan (ESCP) as described in Section 7.3. The construction schedule allows the engineering plans reviewer and the construction inspector to understand the sequence of construction. Typical tasks may include:

- Site mobilization and traffic control
- Installing erosion and sediment controls
- Clearing and grubbing
- Cut and fill operations
- Installing underground utilities and stormwater system
- Seeding, sodding, planting trees, and other landscaping activities
- Street and parking lot construction
- Installing pavement surface
- Installing sidewalks and curbs
- Installing streetlights and signs
- Excavating for building foundations

The construction schedule should indicate how many days are required for each task. Estimate the duration of each task by using realistic number of workdays with allowance for the weather. Computerized scheduling software is often beneficial in terms of revising and adapting schedules to delays caused by weather, broken equipment, subcontractors, material shortages, difficult construction, etc. Advanced scheduling methods usually keep track of available manpower and resources for maximum efficiency. Typical methods may include:

- CPM (Critical Path Method)
- PERT (Planning Evaluation and Review Technique)
- Milestone charts

The construction contractor should notify the city inspector of any major changes or delays to the construction schedule, thus allowing the required construction inspections in Chapter 13 to proceed in a timely fashion.

Construction phases are highly recommended for larger projects such as residential subdivisions, commercial business parks, shopping malls, office complexes, etc. The goal of construction phasing is to minimize the amount of disturbed area at any given time. Construction phases often allow a contractor to make more efficient use of resources and manpower. See Chapter 5 of the Knoxville BMP Manual for additional discussion of construction phases and the effective use of erosion and sediment controls. See AM-02 of the Knoxville BMP Manual for further discussion of construction scheduling and a very brief example of the PERT method.

14.2 Good Housekeeping and Other BMPs

The construction contractor must prevent pollution in all forms on the project site. Potential problems may include excessive noise, construction traffic, dust and other forms of air pollution, leaks and spills, trash, debris, etc. Many departments within the City of Knoxville are specifically instructed to be responsive to citizen complaints in such matters as codes enforcement, zoning violations, stormwater quality and illegal dumping. In addition to City of Knoxville personnel, TDEC also has a large office inside the city limits with many regulatory inspectors who are instructed to respond to complaints from any Tennessee citizen.

Therefore, it is in the best interests of the contractor to prevent or reduce pollution and other nuisance conditions. The first step is to institute good housekeeping measures on the construction site. These measures (which are often called best management practices or BMPs) will help to maintain safe working conditions, orderly traffic at the site, efficient use of limited space, and protection of materials and equipment. Basic rules for good housekeeping include:

- Maintain well-defined paths for vehicle traffic and pedestrian traffic. Ensure adequate visibility and sight distance for safety reasons.
- Store materials and equipment in an orderly manner to prevent waste or damage.
- Supply electricity, lighting, heating, fans, etc, to various locations on the construction site, as needed, in an orderly manner using equipment designed for the particular purpose.
- Provide labeled containers in convenient locations for all types of waste and excess materials. Encourage recycling of materials when possible.
- Adequate supervision and guidance should be provided for all personnel on the construction site.
- Security measures should be taken to prevent or discourage visitors, trespassers or neighborhood children from entering the site.

Liquid materials must be stored in sturdy non-leaking containers that are chemically inert. Equipment fueling and maintenance should not take place at the construction site to minimize the potential for spills and leaks. The Knoxville BMP Manual contains many other recommendations for construction contractors under the AM category (Activities & Methods).

14.3 Waste Management

A major part of the effort to maintain good housekeeping practices is to effectively manage materials and resources at the project site. Waste management, and material storage in general, is often neglected, which actually costs the contractor both time and money because waste handling is a fact of life. In addition, incorrect waste management may cause pollution or other violations for which the contractor can be fined or even shut down. Therefore, plan to manage waste materials in accordance with state and local regulations to avoid problems.

Table 14-1 provides a list of information sources on locating waste management guidance. The Office of Solid Waste has waste inspectors to locate and prevent illegal dumping and trash disposal. The Stormwater Engineering Division has stormwater inspectors to locate and prevent illegal discharges to the stormwater system and natural creeks.

Table 14-1 Sources for Waste Management Guidance		
Document		**Subject**
Knoxville BMP Manual	AM-01	Employee Training (Quick Reference for Disposal Alternatives) -- Table AM-01-1
	AM-06	Material Delivery and Storage
	AM-07	Spill Prevention and Control (Emergency and Regulatory Contacts) -- Table AM-07-1
	AM-08	Waste Management and Recycling
	AM-09	Sanitary and Septic Waste Management
	AM-10	Contaminated Soil Management
	AM-18	Concrete Waste Management
Policy 11		Sediment Disposal for Detention Basin Maintenance
Office of Solid Waste -- on the city website at www.cityofknoxville.org/solidwaste/ Telephone: 865-215-2921 (information on waste collection, recycling, illegal dumping, etc.)		

14.4 Maintenance of Stormwater Facilities During Construction

The construction of stormwater facilities must occur early during the construction process for a number of reasons:

- Underground features that involve trenching and excavations must be coordinated with the grading operations.
- Detention basins also involve substantial grading efforts and must be considered during cut/fill volumes analysis.
- The construction site needs to be well-drained in order to allow operations to continue smoothly and on time.

A cleared site is usually as impervious as the final graded site. Therefore, the cleared site is likely to contribute to increased stormwater runoff volume and even potential flooding if sufficient measures are not in place to detain stormwater, slow runoff velocities, prevent sediment, etc. A proposed detention basin should usually be constructed during initial construction grading, with suitable modifications to serve as a temporary sediment basin also.

Common methods to protect and maintain stormwater facilities during construction (along with the matching reference to the Knoxville BMP Manual) include:

- Preservation of existing vegetation (AM-03)
- Maintenance of existing drainage systems (AM-04)
- Construction road stabilization (ES-03)
- Diversions and downdrains (ES-21)
- Temporary inlet protection (ES-24)
- Temporary sediment trap (ES-18)
- Construction entrance (ES-01)
- Seeding (ES-08) / Sodding (ES-09)
- Check dams (ES-13)
- Silt fence (ES-14)
- Straw bales (ES-15)

In many cases, the developer may choose to use a permanent detention basin as a temporary sediment basin. The approved construction plans should clearly indicate if the detention basin will be used in this manner. The basin outlet structure must be suitably modified during construction

to prevent sediment and silt from leaving the project site. In most cases, the computed detention basin volume is also adequate for sediment settling during construction.

Stormwater facilities (underground pipes and culverts, detention basins, other types of stormwater quality structures) must be periodically cleaned and maintained during construction. At a minimum, stormwater facilities must be cleaned as part of the final construction effort prior to the contractor leaving the construction project. An erosion control inspection must be conducted at least once a week to ensure that all erosion control systems and drainage systems are working correctly. See Policy 11 (in Appendix C) for guidance on sediment disposal from detention basins and other stormwater treatment BMPs.

14.5 Notification of Spills and Other Releases

Knoxville Water Quality Hotline (865-215-4147) is intended to receive anonymous reporting of water quality concerns and illegal discharges 24 hours per day. In an actual emergency or for HAZMAT responders, call the 911 emergency number. In response to calling the Water Quality Hotline, Engineering Department staff will then investigate, coordinate, and enforce illegal dumping, illicit discharges, and spills to the storm drainage system, river, or creeks within the city of Knoxville. Staff are on hand to only assist, not replace, your emergency response contractor or the City HAZMAT team. See the Knoxville BMP Manual under AM-07, Spill Prevention and Control, for a general list of hazardous materials contractors known to provide services in the Knoxville area. According to the Stormwater and Street Ordinance (22.5-53, Notification of Spills and Illicit Discharges):

"As soon as any person has knowledge of any illicit spills or discharges to the stormwater system in violation of the City of Knoxville Stormwater and Street Ordinance, such person shall immediately notify the Engineering Director by telephone [i.e. the Water Quality Hotline 215-4147] of this discharge. If such person is directly or indirectly responsible for such discharge or responsible for the operation of the system or business, then such person shall also take immediate action to ensure the containment and cleanup of such discharge and shall confirm such telephone notification with a written report to the Engineering Director within three (3) calendar days. At a minimum, the written report for any illicit discharge shall include:

i. Date and time of the discharge
ii. Location of the discharge
iii. Material or substance discharged
iv. Duration and rate of flow
v. Total volume discharged
vi. Total volume recovered
vii. Cause or reason for the discharge
viii. Remediation and containment action taken
ix. Material Safety Data Sheets (MSDS) for the discharged material
x. *Action taken to prevent further discharges*
xi. Description of any environmental impact"

The Knoxville Stormwater and Street Ordinance (Section 22.5-52) contains a list of the allowable stormwater discharges to the city storm drainage system, ditches, swales, natural channels, streams, creeks, or sinkholes. Any other material or substance is not an allowable discharge, and

therefore is in direct violation of the city ordinance. The list of allowable stormwater discharges is also included in the Knoxville BMP Manual under AM-01 (Employee Training) and IC-01 (Non-Stormwater Discharges to Storm Drains).

In the event of a leak or spill that presents a serious hazard to life, property or the environment, the first phone call shall be made to the E911 emergency dispatching center. The second phone call should preferably be made to a hazardous materials contractor for which an arrangement has been previously established. The next phone calls shall be made to the Knoxville Water Quality Hotline and to TDEC Water Pollution Control.

The recommended course of action is listed in the Knoxville BMP Manual under AM-07, Spill Prevention and Control. A spill or leak, unless extremely minor in nature, should also be reported to the Tennessee Department of Environment and Conservation (TDEC). A minor spill typically involves a small amount of material that can be completely removed with shovels, buckets or absorbent materials. The Knoxville BMP Manual has emergency and non-emergency numbers for the municipal hazmat response team (see Table AM-07-1).

14.6 Notice of Violation (NOV)

The Stormwater Engineering Department can issue a notice of violation (NOV) for many types of illegal discharges, sediment, erosion, grading without a permit, etc. A copy of the NOV form is included in Appendix A. The NOV shall include the recommended course of action and a timetable to accomplish the corrective action. The NOV may include penalties and fines. Performing site grading or construction without a valid site development permit may result in an NOV, which will serve as a stop-work order until corrective actions are taken.

The Knoxville Stormwater and Street Ordinance (Section 22.5-6) allows the Engineering Director or his designated representatives to enter any property which is believed to discharge or contribute to the stormwater system, stream, natural drainage channel. The purposes for this right of entry are to remove foreign objects or blockages, monitor and inspect stormwater runoff quality, and to enforce any of the provisions of this ordinance. The Knoxville Stormwater and Street Ordinance (Section 22.5-54) may also require any person engaging in any activity (or owning the property in question) to undertake a reasonable monitoring effort for discharges to the stormwater system operated by the City of Knoxville. The monitoring shall be reported periodically in a report to the City of Knoxville.

Chapter 15
DEFINITIONS AND REFERENCES

15.1 Definitions From Other Documents

This section is intended to be a quick reference for many words and terms used in the Land Development Manual. Table 15-1 indicates seven principal sources for many definitions of the various site development terms within the regulations and ordinances. Table 15-2 has a detailed listing of definitions from six of the principal sources, so that the reader can tell at a glance where to find a particular term. However, the 250+ definitions listed in the Knoxville Zoning Ordinance are not included in Table 15-2. When looking at these definitions, it is very important to understand that each definition applies particularly to the regulation or ordinance in which the definition is found. Definitions are not necessarily uniform across all regulations and ordinances. Chapter 9 of the Knoxville BMP Manual also contains a glossary for erosion control, stormwater design and stormwater quality.

These definitions are taken from the city ordinances in common use for engineers and also the Knoxville / Knox County Minimum Subdivision Regulations. For any definitions that do not agree totally in meaning, the most restrictive definition should be used. Since definitions typically contain one or two sentences of essential information, the reader should check the context of use in this manual and other documents to obtain a complete definition and usage of terms. See Section 1.7 for interpretation of language and the interpretation of basic terms.

Table 15-1 **Sources for Land Development Definitions**				The KZO definitions are not included in Table 15-2.
Flood Damage Prevention and Control Ordinance	***Stormwater and Street Ordinance***	***Streets and Sidewalk Ordinance***	***Knoxville and Knox County Minimum Subdivision Regulations***	***City of Knoxville Zoning Ordinance (KZO)***
(Section 12-4)	(Section 22.5-4)	(Section 23-1)	(Section 2)	(Article 2)
www.cityofknoxville.org/engineering/ldmanual/			www.knoxmpc.org/	
33 definitions	**55** definitions	**7** definitions	**93** definitions	250+ definitions
Building terms Floodplain terms Structure terms Surveying terms	Detention terms Drainage terms Pollution terms Site development Storm frequencies	*Curb, Gutter* *Director* *Driveway* *Sidewalk* *Specification* *Street*	Building lot parameters City offices & depts. Street parameters Subdivision terms Surveying terms Utility terms	Building terms Business types Dwelling types Lot terminology Sign types Zoning parameters
Knoxville Tree Protection Ordinance (Sections 14-28 & 14-53) **5** definitions (*Municipal arborist, Special tree district, Tree, Tree on private land, Tree on municipal property*)				
Knoxville Best Management Practices (BMP) Manual (Chapter 9) **70** definitions (such as: site development, stormwater quantity, stormwater quality, pollutants, storm frequencies)				

Table 15-2
List of Definitions

A -- Hi
(+ numbers)

1-year Frequency Storm	22.5 and BMP
2-year Frequency Storm	22.5 and BMP
5-year Frequency Storm	22.5 and BMP
10-year Frequency Storm	22.5 and BMP
25-year Frequency Storm	22.5 and BMP
50-year Frequency Storm	22.5 and BMP
100-year Frequency Storm	22.5 and BMP
500-year Frequency Storm	22.5 and BMP
Acceptance	MSR
Addition (to existing building)	12
Administrative Agency	MSR
Appeal (flood ordinance)	12
Aquifer	BMP
Area of Shallow Flooding	12
Area of Special Flood Hazard	12
Average Ground Elevation	MSR
Bacteria	BMP
Base Flood	12
Baseflow	BMP
Basement	12
Benchmark	MSR
Benthic	BMP
Best Management Practice	BMP
BMP Manual	22.5
Biological Oxygen Demand	BMP
Block	MSR
Block Number	MSR
Blue-Line Stream	22.5 BMP
Board of Environmental Appeals	22.5
Broken Back Curves	MSR
Buildable Area of a Lot	MSR
Building	MSR 12
Building Setback Line	MSR
Certification (plats for MPC)	MSR
Chemical Oxygen Demand	BMP
City	MSR
City Council	MSR
Coliform	BMP
Combined Sewers	BMP
Community Sewer System	MSR
Condominium Development	22.5
County	MSR
County Commission	MSR
Covenants for Permanent Maintenance of Stormwater Facilities (CPMSF)	22.5 BMP
Curb	23
Dedication	MSR
Design Review	MSR
Design Storm	BMP
Detention	22.5 BMP
Developer	MSR
Development	12 BMP
Development Certification	22.5
Development, Large Residential and Commercial	22.5
Development, Small Single Family Residential	22.5
Discharge	22.5 BMP
Dissolved Oxygen	BMP
Distribution	MSR
Disturbed Area	22.5
Driveway	23
Easement	MSR
Easement Area	MSR
Elevated Building	12
Engineer	MSR
Engineering	MSR
Erosion	22.5 BMP
Existing Construction	12
Existing Manufactured Home Park or Subdivision	12
Expansion to an Existing Manufactured Home Park or Subdivision	12
Extended Detention	22.5 BMP
Fecal Coliform	BMP
Field Trip	MSR
First Flush	22.5 BMP
Flood (or Flooding)	12
Flood Hazard Boundary Map	12
Flood Insurance Rate Map	12
Flood Insurance Study	12
Floodplain	MSR 22.5 BMP
Floodway	MSR 12
Floor	12
Frontage	MSR
Functionally Dependent Facility (near waterways)	12
Good Housekeeping	BMP
Gutter	23
Health Department	MSR
Heavy Metals	BMP
Highest Adjacent Grade	12
Highway Department	MSR
Historic Structure	12

MSR – Minimum Subdivision Regulations
12 – Flood Damage Prevention and Control Ordinance
14 – Tree Protection Ordinance
22.5 – Knoxville Stormwater and Street Ordinance
23 – Knoxville Streets and Sidewalk Ordinance
BMP – Best Management Practices Manual

Each definition is specific to the regulation or city ordinance in which it is found. Some definitions may not be universally applicable to the Knoxville Land Development Manual, Knoxville BMP Manual, or other ordinances.

Table 15-2 (continued)
List of Definitions

Hy -- Si

Hydraulic	22.5 BMP	Mean Sea Level	12	Public Hearing	MSR
		Municipal Arborist	14	Public Sewer System	MSR
Hydrograph	BMP	Municipal Separate Storm Drain System (MS4)	BMP	Public Uses	MSR
Hydrologic	22.5 BMP			Public Water System	MSR
Hyetograph	BMP				
		National Geodetic Vertical Datum (NGVD)	12	Receipt (MPC submittals)	MSR
				Recommendation (MPC)	MSR
Illicit Discharge	22.5 BMP	National Pollutant Discharge Elimination System (NPDES)	BMP	Recreational Facilities	MSR
				Recreational Vehicle	12
Impervious Area	22.5 BMP	National Resources Conservation Service (NRCS)	22.5 BMP	Redevelopment	22.5
				Register of Deeds	MSR
Improvements	MSR	New Construction	12	Reserve Strip	MSR
Individual Sewage Treatment Facility	MSR	New Manufactured Home Park or Subdivision	12	Restaurant	22.5
Infiltration	22.5 BMP	Nonpoint Pollution Source	BMP	Retention	22.5 BMP
				Review (MPC)	MSR
Infiltration Basin	22.5 BMP			Reviewing Agency	MSR
		Office of City Engineer	MSR	Right-Of-Way	MSR
Intermittent Stream	BMP	Operator	BMP	Riprap	22.5 BMP
		Outfall	22.5 BMP		
				Road	MSR
Karst	BMP			Roadway	MSR
				Rocking	MSR
Land Development Manual	22.5 BMP	Parking Area	22.5	Runoff	22.5
Land Remnant	MSR	Peak Flow	22.5 BMP		
Lot	MSR	Peak Flow Attenuation	22.5 BMP	Sanitary Sewer	22.5 BMP
Lot, Double-Frontage	MSR				
Lot Area	MSR	Perennial Stream	BMP	Sanitary Sewer System	MSR
Lot Frontage	MSR	Performance and Indemnity Agreement	22.5	Sanitary Wastewater	22.5 BMP
Lot Number	MSR				
Lot Width	MSR	Permanent Reference Marker	MSR	Septic Tank	MSR
		Permanent Reference Monument	MSR	Setback	MSR
				Sewage	22.5
		Person	22.5	Sidewalk	23
Main Stream	22.5	Plan, Concept	MSR	Sight Distance	MSR
Major Road Plan	MSR	Plan, Design	MSR	Sinkhole	22.5 BMP
Major Storm	22.5 BMP	Planning Commission	MSR		
		Plat, Final	MSR BMP	Site Development	22.5 BMP
Manufactured Home	12				

MSR – Minimum Subdivision Regulations
12 – Flood Damage Prevention and Control Ordinance
14 – Tree Protection Ordinance
22.5 – Knoxville Stormwater and Street Ordinance
23 – Knoxville Streets and Sidewalk Ordinance
BMP – Best Management Practices Manual

Each definition is specific to the regulation or city ordinance in which it is found. Some definitions may not be universally applicable to the Knoxville Land Development Manual, Knoxville BMP Manual, or other ordinances.

Table 15-2 (continued) List of Definitions

Sp -- Z

Special Tree District	14	Substantial Damage	12	Unit	MSR
Specification	23	Substantial Improvement	12	Use	MSR
Start of Construction	12	Substantially Improved Existing Manufactured Home Park or Subdivision	12	Utility	MSR
Stormwater	22.5 BMP			Utility Agency	MSR
Stormwater System	22.5 BMP	Surveying	MSR	Variance (flood regulations)	12
		Surveyor	MSR	Vegetation	22.5 BMP
Street	MSR 23	Swale	22.5 BMP	Verification (of design plans)	MSR
Street, Classified	MSR				
Street, Half	MSR			Wastes, Industrial/Commerical	22.5 BMP
Street, Intersection	MSR	Test Holes (for soil tests)	MSR		
Street Classification	MSR	Time of Concentration	BMP	Wastes, Other	22.5 BMP
Street Furniture	MSR	Total Dissolved Solids	BMP		
Street Grade	MSR	Total Maximum Daily Load (TMDL)	BMP	Watercourse	MSR
Street Line	MSR			Watercourse, Permanent	MSR
Street Sign	MSR	Total Suspended Solids	BMP	Watershed	BMP
Structure	12	Tree	14	Way	MSR
Subdivider	MSR	Tree (on municipal property)	14		
Subdivision	MSR	Tree (on private land)	14	Zoning Ordinance	MSR

MSR – Minimum Subdivision Regulations
12 – Flood Damage Prevention and Control Ordinance
14 – Tree Protection Ordinance
22.5 – Knoxville Stormwater and Street Ordinance
23 – Knoxville Streets and Sidewalk Ordinance
BMP – Best Management Practices Manual

Each definition is specific to the regulation or city ordinance in which it is found. Some definitions may not be universally applicable to the Knoxville Land Development Manual, Knoxville BMP Manual, or other ordinances.

15.2 References

A few references are listed below. These references do not include all information and guidance necessary to successfully design and construct a site project, but serve as a starting point. Many other books and design publications will serve the professional design engineer just as well. Many stormwater design manuals and books are also listed in Chapter 10 of the Knoxville BMP Manual, mainly covering these topics: stormwater treatment, erosion control, stormwater detention, preserving natural vegetation, pollution prevention and reduction, etc. The Land Development Manual contains information to assist in the design and layout of most projects. However, this manual does not replace the need for professional engineering judgment and knowledge. Most types of construction plans must be stamped and signed by a registered professional engineer, architect, or landscape architect who is actively licensed in the state of Tennessee. The design professional must have sufficient education and experience to perform a complete and thorough design of each element on the construction plans.

---

1. American Association of State Highway and Transportation Officials (AASHTO), *A Policy on Geometric Design of Highways and Streets*.

2. Debo, Thomas, and Andrew Reese, *Municipal Storm Water Management*, Lewis Publishers, 1995.

3. Dewberry & Davis, *Land Development Handbook*, Editors S.O. Dewberry and J.S. Matusik, McGraw-Hill Inc, 1996.

4. Federal Highway Administration (FHWA), *Manual on Uniform Traffic Control Devices* (or also called MUTCD), December 2000.

5. Federal *Highway* Administration (FHWA), *Hydraulic Design of Highway Culverts*, Hydraulic Design Series No. 5, September 1985.

6. Tennessee Department of Environment and Conservation (TDEC), *Tennessee Erosion and Sediment Control Handbook*, July 1992.

7. Tennessee Department of Transportation (TDOT), Standard Roadway and Structure Drawings, Design Division and Structures Division.

8. Tennessee Department of Transportation (TDOT), *Standard Specifications for Road and Bridge Construction*, March 1995.

9. United States Department of Agriculture (USDA), Soil Conservation Service (SCS), *Urban Hydrology for Small Watersheds*, Technical Release 55 (TR-55), June 1986.

10. Virginia Department of Conservation and Recreation, *Virginia Stormwater Management Handbook*, First *Edition*, 1999.

11. Weather Bureau, *Rainfall Intensity-Duration-Frequency Curves*, Technical Paper No. 25, December 1955.

12. Weather Bureau, *Rainfall Frequency Atlas of the United States for Durations from 30 Minutes to 24 Hours & Return Periods from 1 to 100 Years*, Technical Paper No. 40, May 1961.

Appendix A
STORMWATER ENGINEERING DIVISION FORMS

Application Forms		
A.	**Site Development Permit Application**	A-2
B.	**Property Owner Acknowledgement Form**	A-3 to A-4
C.	**Fee Computation Worksheet**	A-5
D.	**CPMSF Information Worksheet**	A-6
Checklists		*Pages*
E1.	**Site Development Review Checklist**	A-7 to A-9
E2.	**Site Development Submittal Review Checklist**	A-9.1
F.	**Plat Review Checklist**	A-10 to A-13
G.	**Site Inspection Checklist**	A-14 to A-15
H.	**Development Certification Checklist**	A-16 to A-17
Permits (to be filled out by the Engineering Plans Reviewer)		*Page*
I.	**Construction ROW Permit ***	A-18
J.	**Floodplain Development Permit ***	A-19
K.	**Site Development Permit ***	A-20
Miscellaneous Forms		
L.	**Notice of Violation (NOV) Form ****	(1 page)
M1.	**Special Pollution Abatement Permit *****	(3 pages, BMP Manual)
M2.	**SPAP for Restaurant, Grocery Store or Food Handling Facilities*****	(2 pages)
M3	**SPAP for Vehicle and Equipment Facilities*****	(2 pages)
M4	**SPAP for Vehicle Wash Facilities*****	(2 pages)
M5	**SPAP for Large Parking Lot Facilities*****	(2 pages)
N.	**FEMA Elevation Certificate & Instructions ******	(11 pages, US gov't form)
O.	**Notice of Intent (NOI) Form**	(2 pages)
P.	**Notice of Termination (NOT) Form**	(1 page)
Q.	**NOI/SWPPP Review Checklist**	(2 pages)
R.	**Stormwater Monitoring Report Form**	(2 pages)

***** Actual permits are filled out by the Engineering Department on original forms (in quadruplicate).

****** NOV form is issued upon cause by the Engineering Department on original form in quadruplicate. The actual form is a half sheet of paper (5.5" by 8.5") with writing on the front and back.

******* See Knoxville BMP Manual (Chapter 7) for instructions and required information for the **Special Pollution Abatement Permit.** Knoxville BMP Manual contains guidance on preparing Erosion and Sediment Control Plan (Chapter 5) and Stormwater Pollution Prevention Plan (Chapter 6).

******** The floodplain development permit, issued as part of a site development permit or a building permit, ensures that contractor & developer will comply with FEMA regulations/guidelines. An additional form, **FEMA Elevation Certificate & Instructions**, must be submitted after construction is completed. The form can also be downloaded from the FEMA website.

CITY OF KNOXVILLE

SITE DEVELOPMENT PERMIT APPLICATION

Today's Date and Time: _____ Tracking Number: _____
Project Name: _____
Address (as supplied by MPC Addressing): _____
Project CLT #: _____ Project City Block #: _____
City Ward #: _____ Property Zoning: _____
Proposed use of this property: _____
Owner's Name: _____
Address: _____
Phone #:_____Fax #:_____Email:_____
Contractor's Name: _____
Address: _____
Phone #:_____Fax #:_____Email:_____
Engineer's Name: _____
Address: _____
Phone #:_____Fax #:_____Email:_____
Contact for Permit: _____
Phone #:_____Fax #:_____Email:_____
Are there any variances, BZA, Use on Review, or City Council actions? Yes: _____ No: _____
If Yes, attach copy of approvals and list the File #: _____

THESE ITEMS MUST BE INCLUDED ON PLANS IN ORDER FOR PLANS TO BE ACCEPTED.
(Please **initial** beside the appropriate headings below that all requirements are included in the submittal package.)

_____ All Site Development Plans
Legible; Property Zoning; Predevelopment 2-ft Contours; Postdevelopment 2-ft Contours; Effective Erosion and Sediment Control Plan; Plans Stamped by Licensed Engineer, Landscape Architect, or Architect as appropriate; Names, Addresses and Phone Numbers of All Interested Parties; All Stormwater Conveyances and Details (Pipe Material, Size, Slope, Invert Elevations, Flow, Velocity, Inlet Materials and Dimensions); Ditch/Swale Dimensions and Materials; Building Pad Contours; Blue-Line Streams Identified; Drainage Easements Shown; Flood Zones Shown; Utility Easements Shown; Stream Buffer Zone Shown; No-Fill Line; Landscaping Plan or Note; North Arrow; Graphic Scale Bar; Vertical Datum.

_____ Roadway Plans:
Labeled as Public Street, JPE or Driveway; Roadway Profiles; Roadway Cross Sections; Horizontal Curve Data; Vertical Curve Data (with K Values); Limits of Construction; Paving Materials and Details; Temporary or Permanent Turnaround (if applicable); Show Utility Strip; 10' Clear Zone (Min 7'); Sidewalks; Traffic Sign Plan; Streetlighting Plan/ Details.

_____ Detention Basin Design:
Stamped Detention Calculations for 1-Yr, 2-Yr, 5-Yr, 10-Yr, 25-Yr & 100-Yr NRCS Type II 24-Hour Storms; Standpipe Detail With All Elevations and Sizes Shown; Elevation/Volume Relationship for Pond; First Flush Filter Detail; Pre and Post CN; Pre and Post Area; Pre and Post Tc; Pond Release Routed for 2-Yr and 10-Yr Storm; Minimum 1' Freeboard; Side Slope; Bottom Slope; Spillway Size and Elevation; Traversable Access Route; Stormwater Detention and Access Easements.

_____ Property Owner Acknowledgement Form
_____ Site Development Review Fee
_____ Site Development Review Checklist
_____ Stormwater Drainage Calculations
_____ Detention Basin Calculations
_____ Retaining Wall Calculations

Signature of Submitter: _____
Application Received By: _____ Payment:_____
(All review fees are non-refundable)

PROPERTY OWNER ACKNOWLEDGEMENT FORM

NOTE: ***Site plan review cannot begin until this document is signed by the PROPERTY OWNER and returned to the Engineering Department.***

Most questions can be answered by referring to the Land Development Manual & the Stormwater and Street Ordinance, which can be found on the city's website (www.knoxvilletn.gov/engineering) under the stormwater section. Contact the Engineering Department at 215-2148 for specific questions.

1) A *detention basin with first flush water quality treatment* is required for all development projects that meet one or more of the following criteria:
   - Road construction exceeding one-half (1/2) acre of impervious surface;
   - All commercial, industrial, educational, institutional and recreational development with 1 acre or more of disturbed area;
   - Residential developments with 5 acres or more of disturbed area;
   - Any subdivision with 5 lots or more;
   - Any project adding one-half (1/2) acre or more of impervious surface;
   - Redevelopment which causes the improvement of 50% or more of the assessed value of the lot, building, or lot use; or
   - When the Engineering Director deems it necessary to prevent downstream flooding.

   See the Stormwater & Street Ordinance, §22.5-23 and §22.5-4, for more information. Stormwater retention for the 100-year storm may also be required if the project is within or drains to a sinkhole or other area of known flooding (§22.5-32).

2) A *Special Pollution Abatement Permit* is required for the following land uses:
   - Vehicle, truck and heavy equipment maintenance, fueling, washing or storage areas (such as automotive dealerships, automotive repair, carwashes, maintenance yards, etc.);
   - Any property containing more than 400 parking spaces or 120,000 square feet of parking area;
   - Recycling and/or salvage facilities;
   - Restaurants, grocery stores, and other food service facilities;
   - Commercial facilities with outside animal housing areas (such as animal shelters, fish hatcheries, kennels, livestock stables, veterinary clinics, zoos, etc.); or
   - Other producers of pollutants identified by the Director of Engineering by information provided to or collected by him or his representatives, or reasonably deduced or estimated by him or his representatives from engineering or scientific study.

   See the Stormwater and Street Ordinance, § 22.5-37, and also Chapter 7 of the Knoxville Best Management Practices (BMP) Manual for more information.

3) A *Performance & Indemnity Agreement*, secured by a surety bond, letter of credit or cashier's check, is required when:
   - Any or all of the following is being constructed/installed: detention/retention basin; water quality facilities/devices; retaining walls (under certain conditions).
   - There is a Joint Permanent Easement, Public Road or Alley being constructed;
   - There is a potential for runoff to adversely impact city rights-of-way and/or adjacent property owners;
   - A site drains to a sinkhole; or
   - The site is used for a borrow pit.

   See the Stormwater and Street Ordinance, § 22.5-27(i) & §22.5-5, and Appendix C of the Knoxville Land Development Manual for more information.

4) A document called *Covenants for Permanent Maintenance of Stormwater Facilities* is required when:
   - There is a detention basin or retention basin;
   - There is any type of first flush basin, water quality facility/device; or
   - A Special Pollution Abatement Permit is required.

   See the Stormwater and Street Ordinance, § 22.5-34, and Appendix C of the Knoxville Land Development Manual for more information.

5) A *Plat* is required for all developments that have any of the following:
   - A detention basin or retention basin;
   - Any type of first flush basin, water quality device, insert and/or facility;
   - Special Pollution Abatement Permit; or
   - Any property that has never been platted as is currently subdivided.

   For more information on preparing plats, please refer to the plat requirements in the Minimum Subdivision Regulations (maintained by MPC), the plat checklist in Appendix A, and the policies in Appendix C of Land Development Manual.

6) Development certification, including an as-built plan, is required to release the Performance and Indemnity Agreement.
   - The development certification is issued by the Engineering Department after all construction has been completed in accordance with approved design plans.
   - An accurate as-built drawing must be submitted and sealed by the design engineer and a surveyor, and approved by City engineering.

   For more information on development certification, please refer to Appendix A and Form H of the Land Development Manual.

7) As per the City of Knoxville's Stormwater and Street Ordinance, construction sites are required to install, inspect, repair, and maintain all erosion and sediment control (ESC) measures as per the approved plan AND install, inspect, repair, and maintain any additional ESC devices required by current and/or future site conditions to comply with the intent of my ESC plan. Construction sites are dynamic and require a PROACTIVE approach to the installation, inspection, repair, and maintenance of ESC measures. The City of Knoxville DOES NOT provide the required ESC inspections of twice weekly and after every significant rainfall. Failure to be proactive in installing, inspecting, repairing, and maintaining ESC measures may result in a Notice of Violation and/or a Civil Penalty of not less than $50.00 or more than $5,000.00 per day of violation. Civil penalties may be issued based on actions prior to the issuance of a Notice of Violation and not necessarily on the response to the Notice of Violation.

BY SIGNING THIS DOCUMENT, I AM STATING THAT I HAVE READ AND UNDERSTAND THE PERMITTING REQUIREMENTS DEFINED HEREIN. I UNDERSTAND THAT THESE REQUIREMENTS MUST BE COMPLIED WITH PRIOR TO THE ISSUING OF A SITE DEVELOPMENT PERMIT.

_____ _____
PROPERTY OWNER (Signature) **DATE**

Please print the following:

PROJECT NAME: _____

PROJECT ADDRESS: _____

PROPERTY OWNER NAME: _____

PROPERTY OWNER CONTACT PERSON: _____

ADDRESS: _____

EMAIL ADDRESS: _____

PHONE: _____ **FAX:** _____

CITY OF KNOXVILLE

Fee Computation Worksheet

(Stormwater Engineering Division only)

Date: _____

Name: _____

Project name: _____ Proposed property use: _____

Project address: _____

Site development: *SSFR* or *LRCD* MPC Zoning classification: _____ Number of lots: _____

Total acres: _____ Acres rounded down (truncated) to nearest tenth for fee computation: _____

Plans Review:

(Due at the initial submittal of Site Plans)

	Yes/ No?	Computation	Amount
1. Site Development Plans which only require an Administrative Plat Review:			
A. Small Single Family Residential -- less than 10,000 sq.ft. disturbed area		No charge (Free)	
B. Large Residential and Commercial Development, Less than 1.0 acre		$150.00	
C. Large Residential and Commercial Development, From 1.0 to 5.0 acres		$150.00 + $20 per acre	
D. Large Residential and Commercial Development, Over 5.0 acres **		$250.00 + $10 per acre**	
E. Condominiums / Apartments / Townhouses (# of units = _____)		$150.00 + $5 per unit	
2. Site Development Plans which require a Subdivision Review:			
A. Subdividing into 1 to 50 lots		$150.00 + $12 per lot	
B. Subdividing into more than 50 lots ***		$750.00 + $8 per lot***	
3. For each additional Plans resubmittal, beginning with the 4th submittal ……		$100.00 per resubmittal	

Site Development Permit:

(Due upon approval of Site Plans)

1. Site Development Plans with Administrative Plat Review, with no Performance & Indemnity Agreement:			
A. Small Single Family Residential -- less than 10,000 sq.ft. disturbed area		$10.00	
B. Large Residential and Commercial Development -- any size		$50.00	
2. Site Development Plans with Administrative Plat Review, with a Performance & Indemnity Agreement:			
A. Projects with less than 1.0 acre		$350.00	
B. Projects with 1.0 acre or more		$350.00 + $15 per acre	
C. Condominiums / Apartments / Townhouses (# of units = _____)		$350.00 + $5 per unit	
3. Site Development Plans which require a Subdivision Review:			
A. From 1 to 4 lots		$150.00 + $10 per lot	
B. From 5 to 50 lots		$350.00 + $20 per lot	
C. More than 50 lots ***		$1350.00 + $5 per lot***	
4. Multiply the permit fee by 10 if site development has already started.		Multiply by 10.	

Engineering Plat Review Fee:

(Due before approval of Plat)

1. Administrative Plat Review		$80.00	
2. Exempt Subdivision and Corrected Plats		$70.00	
3a. All other plats: From 1 to 50 lots		$100.00 + $10 per lot	
3b. All other plats: More than 50 lots ***		$600.00 + $6 per lot***	

** -- for every additional acre over 5 *** -- for every additional lot over 50

Misc				
	Construction Right-of-Way Permit	City Ordinance Section § 23-71 to 83		Computed by Engr Dept if necessary
	Floodplain Development Permit	City Ordinance Section § 12-34		No charge (Free)
	Special Pollution Abatement Permit	City Ordinance Section § 22.5-37		$100.00 (if necessary)

INFORMATION WORKSHEET FOR CPMSF DOCUMENT

COVENANTS FOR PERMANENT MAINTENANCE OF STORMWATER FACILITIES (CPMSF)

(also known as "Maintenance Agreement")

1. PROPERTY OWNER: Name _____

   Address _____

   _____

   _____
   City State Zip Code

2. CLT # _____ [Obtain from Property Assessor's office at 865-215-2360 or by using KGIS Maps interactive mapping at www.kgis.org.
   The CLT # includes the Map #, Insert #, Group #, and Parcel #.]

3. City Block # _____ [May be obtained by calling the Department of Engineering - Technical Services Counter at 865-215-2103.]

4. Street address of project: _____

5. Date that property deed was recorded: _____

6. Warranty Book and Page Number (or an Instrument Number) that was assigned to the property deed by the Knox County Register of Deeds (865-215-2330):

   Before June 1999, recorded in Warranty Book #_____ at Page # _____

   After June 1999, recorded as Instrument # _____
   (there should be 15 numbers)

7. Title of site plan drawings submitted to the Department of Engineering:

   _____
   (Can be obtained from your engineer.)

8. Name of engineer (and firm) who prepared your site plan: _____

   _____

9. Date of last plan revision approved by Department of Engineering: _____

Complete this worksheet when requested by the Stormwater Engineering Division. The secretary of the Stormwater Engineering Division will use this information to prepare a Covenants document to be signed by the Property Owner and then notarized.

City of Knoxville

SITE DEVELOPMENT PERMIT REVIEW CHECKLIST

Date: _____ Number of times reviewed (including this one): _____

Project name: _____ Address: _____

General Requirements:

		Yes	No	N/A
1.	Has the site development review fee been paid?			
2.	Has MPC address certification been obtained?			
3.	Is the city block # on the site development plan?			
4.	Is the CLT # on the site development plan?			
5.	Are all names, phones and addresses of interested parties on the site development plan?			
6.	Is there a vicinity map with all adjacent streets shown and labeled?			
7.	Do all plans have a scale (preferably graphic scale) and north arrow?			
8.	Is the vertical datum reference shown on the plan? (NGVD29, NAVD88, ASSUMED)			
9.	Are all plans stamped & signed by professional engineer, landscape architect, or architect registered in TN?			
10.	Has MPC plan approval been obtained?			
11.	Has the total site acreage and total disturbed area been calculated and shown on drawings?			
12.	Has the Property Owner Acknowledgement Form been submitted?			

Property Requirements:

		Yes	No	N/A
1.	Are all property lines shown clearly and labeled?			
2.	Is the information concerning adjoining property owners correct?			
3.	Does property match the official city ward maps (Technical Services Counter - 4th floor)?			
4.	Is the site free of any existing drainage easements or detention easements?			
5.	Are the mandatory utility easements (10' exterior and 5' interior lot lines) free and usable?			
6.	If it is a major subdivision, have two permanent monuments been provided?			
7.	Is the existing right-of-way adequate? (As per the Major Road Plan)			
8.	Have all variances and zoning regulations been incorporated?			
9.	Are all proposed structures and signs sufficiently set back from property lines?			

Grading:

		Yes	No	N/A
1.	Are all existing and proposed contours shown at 2' intervals (maximum)?			
2.	Do all proposed contour lines tie back in properly?			
3.	Is all of the grading inside of the property line?			
4.	Are all slopes flatter than 2:1?			
5.	Is the site free from any retaining walls?			
6.	Are all existing features clearly labeled to either remain or to be removed?			
7.	Has a landscaping plan or note been provided?			
8.	Is the disturbed area less than 5 acres? If disturbance reaches/exceeds 5 acres, sediment pond(s) required.			
9.	Is the disturbed land less than 1 acre? (Otherwise will need NPDES construction permit)			

Streets, Sidewalks, & R.O.W.:

		Yes	No	N/A
1.	Is a proper roadway section shown (width of base under curb, prime coat, tack coat, etc)?			
2.	Local city street pavement is 1.5" Grading D, 2.5" Grading B, and 8" Class A Grading D shown?			
3.	Are contraction joints (5') and expansion joints (25' and fixed objects) shown for all concrete?			
4.	Are all streets and drives correctly labeled as either dedicated, JPE or as a driveway?			
5.	Is horizontal curve information provided for each street and driveway?			
6.	Is vertical curve information (including K values) provided for each street and driveway?			
7.	Are all turning radii shown and adequate for each street and driveway?			
8.	Do the tops of catch basins and manholes line up properly with the proposed profiles?			
9.	Is appropriate clear zone provided each side of the right of way? (10 feet from curb maximum 4% slope)			
10.	Is there 3 feet of clearance around sidewalk "obstacles" to afford accessibility?			
11.	Are sidewalks shown correctly on plans and details (with a cross-slope)?			
12.	Are all driveway cuts and sidewalk cuts (12:1 slope) shown on the plans and details?			
13.	Has a TDOT right-of-way access permit been obtained for all state routes?			
14.	Are minimum parking and access requirements met? (refer to Art. 5 Sect. 7 of Zoning Ordinance)			
15.	Is there appropriate site distance for all driveways and street intersections?			
16.	Is there a proper detail for any utility trench that is within city or state right-of-way?			
17.	Do curbs meet City standard detail or match existing?			
18.	Does sidewalk match City standard detail (5' w/2' grass or 7') or match existing (if applicable)?			

Drainage:

		Yes	No	N/A
1.	Are all existing drainage features shown and labeled correctly with inverts?			
2.	Is the site free from any sinkholes? (100% retention required for known sinkholes)			
3.	Is the site away from any blue-line streams and wetlands? (If not, then an ARAP may be required.)			
4.	Is the site located away from floodplain and above the base flood elevation?			
5.	Are all pipe sizes, lengths, slopes, construction material, inverts and capacities shown?			
6.	Are all appropriate lines shown? (No fill line, Buffer zone, Floodway, 500-year, 100-year, F-1 zone)			
7.	Are all proposed catch basins and pipes consistent with a logical flow path?			
8.	Are all pipe slopes sufficient (not too flat or too steep)?			
9.	Are all appropriate drainage details provided?			
10.	Do all of the drainage details correspond to the plan locations with consistent elevations?			
11.	Are catch basins or junction boxes shown at all changes in grade and direction?			
12.	Is the environmental message detail for manhole cover, curb iron, and grate inlet shown on the plans?			
13.	Are high pipe velocities handled in a manner to prevent HGL problems?			
14.	Are all pipe and culvert outlets sufficiently stabilized and controlled to prevent erosion?			
15.	Is the downstream drainage system able to handle the 2-year and 10-year storms?			
16.	Is RCP used for all systems draining offsite water or systems needed to prevent flooding?			
17.	Are all pipes within the ROW a minimum of 15" diameter?			
18.	Are all pipes and ditches sized for the appropriate design storm?			
19.	Are drainage easements provided for pipes carrying offsite water or crossing property lines?			
20.	Have elevations/contours been provided for proposed sidewalk, curb/gutter, etc. located in right of way?			

Stormwater Detention and Water Quality:

		Yes	No	N/A
1.	Is stormwater detention needed for this project, based on site development classification?			
2.	Has a Special Pollution Abatement Permit been prepared? (See BMP Manual Chapter 7)			
3.	Is the stormwater detention basin designed to attenuate the 1-, 2-, 5-, 10-, 25- and 100-year storms?			
4.	Is 100-year retention provided for areas draining to sinkholes?			
5.	Is 100-year retention provided in areas of known flooding? (Ten Mile, Harrell Hills, Prosser Rd, etc.)			
6.	Do all areas drain to the detention basin as designed in the calculations during a 100-yr storm event?			
7.	Is there an elevation/volume relationship table for the detention basin?			
8.	Are pre-developed and post-developed areas, CN, and Tc accurate and reasonable?			
9.	Have the detention calculations been prepared and stamped by a professional engineer?			
10.	Is the proper first flush attenuation been achieved for minimum of 24 hours? (The first 1/2" or 4500 ft^3.)			
11.	Is the outlet control structure and culvert made from RCP, concrete, or sturdy masonry?			
12.	Does the outlet detail show all orifices with feasible sizes and elevations?			
13.	Does the outlet detail show a first flush filter that is easily constructed and maintained?			
14.	Does the detention basin invert have a positive slope towards the outlet control structure?			
15.	Are all inlet pipes located as far as possible from the outlet control structure?			
16.	Is the detention basin smoothly graded with adequate berms and 3:1 maximum slopes?			
17.	Is a detention easement provided for the detention basin on the plan?			
18.	Is a water quality facility easement provided for all water quality devices?			
19.	Is an access easement provided for the detention basin and/or water quality devices on the plan?			
20.	Is an anti-seep collar(s) provided for the detention outlet pipe?			
21.	Is there a 2% slope in the bottom of the detention pond?			
22.	Has the pond been designed for 15% extra storage?			
23.	Is there a minimum of 1 foot of freeboard from 100-year storm and the top of berm?			

Erosion and Sediment Control:

		Yes	No	N/A
1.	Is construction entrance properly located with a detail (min 50' long, 16' wide, 6" deep)?			
2.	Does the plan show details for silt fences and straw bale barriers as needed?			
3.	Do the E&S details show flow arrow for proper alignment of silt fence and straw bale?			
4.	Does the plan show temporary and permanent seeding?			
5.	Is temporary inlet protection shown for all catch basins, inlets and culvert entrances?			
6.	Is all riprap sufficiently designed and shown on plans and details (with D50 sizes)?			
7.	Have Knoxville BMP Manual and T.E.S.C.H. been consulted for unusual conditions?			
8.	Do the plans specify to build detention pond as first item of construction?			

Miscellaneous:

		Yes	No	N/A
1.	Has a bond (performance and indemnity agreement) been posted?			
2.	Has a Pre-construction Conference been arranged? (Developer's Assistance Meeting)			
3.	Has the Covenants for permanent maintenance been recorded for the detention basin and WQ devices?			
4.	Has a Streetlighting Plan, with pole type and fixture, been included for all subdivisions?			
5.	Has a Street Signage Plan with locations and details been included for all subdivisions?			
6.	Has all work been proposed outside the R.O.W.? (If not, a Construction R.O.W. permit is also needed)			
7.	Does the property have a recorded plat to dedicate easements?			

Detention Computation Inputs						
			Subarea #1		Subarea #2	
			Predeveloped	Postdeveloped	Predeveloped	Postdeveloped
Area	A	Acres				
Curve number	CN	------				
Time of concentration	Tc	Min				

Types of soil with hydrologic characteristics:

_____

Method for computing times of concentration:

_____

Detention computation methods and software:

_____

Post-Developed CN computation				
Description	Area (acres)	Soil Name	HSG	CN

Summary of Outlet Control Stucture			
Invert Elevation	Type of Control	Size	Coeffecient Used

Summary of Detention Routing						Top of berm elevation: _____
Design Storm	Subarea #1			Subarea #2		
	Predeveloped peak flow	Postdeveloped peak flow	OK?	Predeveloped peak flow	Postdeveloped peak flow	OK?
1-year						
2-year						
5-year						
10-year						
25-year						
100-year						

Name of professional engineer on stormwater detention calculations: _____

P.E. # _____ Expiration date: _____

City of Knoxville

SITE DEVELOPMENT PERMIT SUBMITTAL REVIEW CHECKLIST

Date: _____ Number of times reviewed (including this one): _____
Project name: _____ Type of review requested: _____
Address: _____ Site Development: SSFR *or* LRCD
Zoning classifications: _____

Fees:		**Amount**		**Yes**	**No**	**N/A**
A.	Calculated site review fee:		Is site review fee calculated correctly?			
B.	Calculated fee for the site development permit:		Is permit fee calculated correctly?			
C.	**Are the application and owner acknowledgement forms included, and complete?**					
D.	**Has the total site acreage and total disturbed area been calculated and shown on drawings?**					

Minimum Requirements:		**Yes**	**No**	**N/A**
1.	Has the site development review fee been paid?			
2.	Are all the applicable city block numbers on the site development plan?			
3.	Are all the applicable CLT numbers on the site development plan?			
4.	Are all names, phone numbers, and addresses of interested parties on the site development plan?			
5.	Is there a vicinity map with all adjacent streets shown and labeled?			
6.	Are all plans and calculations stamped & signed by professional engineer, landscape architect, or architect registered in TN?			
7.	Has a certified address from the Metropolitan Planning Commission been submitted?			
8.	Are the plans legible (for microfilming and reproducing)?			
9.	Are all existing and proposed contours shown at 2' intervals (maximum)?			
10.	Does the submittal include an erosion and sediment control plan?			
11.	Are retaining wall calculations included, if required?			
12.	Are all required hydraulic and hydrologic calculations included? (Including pre- and post-development delineated watershed maps; including area, curve numbers, and times & concentrations)			

PLAT REVIEW CHECKLIST
Engineering Department

Date Received: _____
Review Fee: _____

Date Faxed / Emailed: _____
To: _____
Contact: _____

Subdivision Name: _____
Surveyor / Company: _____
Ward / City Block: _____ Surveyor's Dwg. #: _____
MPC File # _____ CLT: _____

City Engineering Department Phone: (865) 215-2148
From: Fax: (865) 215-2631

Streets: (Section 62-94)	R/W Shown:	R/W Required:	Additional R/W Needed?	Comments
			Yes No	
			Yes No	
			Yes No	
			Yes No	

MSR = Minimum Subdivision Regulations for Knoxville & Knox County at **http://www.knoxmpc.org**
EP = Engineering Department Policy SOP = Land Surveyor's Standards of Practice Ord = City Stormwater/Street Ordinance (22.5)

	Items (√ = Yes X = No --- = Not Applicable) √ - see comments sheet	MSR	Correction Required?
	PROPERTY COMPUTATIONS		
1	**CLOSURES (Category 1): Boundary? R/W's? Easements?**		
2	**Survey Control**: Tie Req'd? Tied? Tie ok?	(44-92)	
3	**NORTH ARROW**: Shown? Labeled Properly? Toward Top of Page?	(44-83)	
4	**BASIS FOR NORTH STATEMENT? Grid North?**	EP-17	
5	**BEARINGS** to Nearest Minute or better? **DISTANCES** in Hundredths of Feet? **Clockwise?**	(44-85 & 44-95)	
6	**HORIZONTAL DATUM SHOWN?** NAD83 (2011) NAD83 (NSRS2007)?	SOP	
7	**VERTICAL DATUM:** Elevation shown? NGVD29 or NAVD88 or other vertical datum referenced?		
8	**LOT AREAS:** Lot Area Shown? Sq. Ft? Did Acreage Change? Area of JPE or panhandle excluded?	(64-24)	
9	**PANHANDLE LOT:** Access width (25') shown? Perpendicular distance labeled? Access excluded from area?	(64-24)	
10	**LOT MINIMUMS:** Minimum Area **OK**? Road Frontage **OK**? (Min 25' on Public ROW)	(64-24)	
11	**SUBSTANDARD LOT REMNANT Created?** Variance Requested? Landlocked?	(64-27, 47-10,20)	
12	**CORNER MONUMENTS:** At all corners? Described? Labeled as Old or New?	(74-20)	
	STREETS AND RIGHTS-OF-WAY		
13	**STREET NAMES**: Shown Correctly? New Roads Identified as Public, Private, or JPE?	(44-95 & 62-91)	
14	**Street Tie to Nearest Intersection:** Shown? Intersection Point Identified? Correct Street Name?	(44-92.1)	
15	**STREET R/W'S:** Total Width Shown? Perpendicular Distance to C/L of Existing Roadway?	(62-94 & 62-37)	
16	**STREET C/L's and & ALLEY C/L's**: Shown? C/L Existing Pavement or C/L Existing R/W?	(62-90)	
17	**STREET R/W'S:** Radius dedicated on new roads & JPEs? Encroachment into public R/W? Distances for all encroachments?	(62-84,85)	
18	**STREET R/W'S:** Curves shown on new roads & JPEs (if chord deflection angles > 10°)? Are curves tangential?	(62-71)	
19	**CUL-DE-SACS:** New R/W radius = 50'? Cul-de-sac return radius = 75'? Existing cul-de-sac radius adequate?	(62-95)	
20	**CROSS ACCESS OR EXCLUSIVE PERMANENT ACCESS ESMT:** Law Dept? Bk/Pg (Inst)? R/W? Road Frontage?	(64-24)	
21	**CROSS ACCESS OR EXCLUSIVE PERMANENT ACCESS ESMT:** B&D? P/L Ties? Perpendicular distance (25' minimum)?	(64-24)	
22	**JOINT PERMANENT ESMT:** 40' Width? Notify Law Dept If Over 5 Lots?	(64-24)	
23	**JOINT PERMANENT ESMT (if serving 2 or more lots): Meets all requirements for MSR 64-24?**	(64-24)	
24	**CLOSED STREETS & ALLEYS:** Shown? Closing Ordinance # Correct? Limits cross-hatched?	-----	
25	**CLOSED STREETS & ALLEYS:** Closure Effective (17 days past ordinance date unless conditional)? Quitclaim deed referenced on plat?	-----	
26	**CONDITIONAL ROW CLOSURE?** Plat Conditions Met? Non-Plat Conditions Met? Conditional ROW Closure Note Shown?	-----	
27	**INTERSECTION RADIUS CORRECT?:** Commercial/Industrial/Office (75') Residential/Agricultural (25')	(62-84,85)	
28	**CURVES:** Central Angle (D)? Arc? Radius? Tangent? Chord B&D? PC/PT/POC?	(44-95)	
	BASIC DRAWING INFORMATION AND LINEWORK		
29	**SHEET SIZE**: 18x24" or 24x 36'? 2" Left Border? Other sides 1/2"?	(44-82)	
30	**Graphic Scale?** Numeric Scale? 1"=100' or Less? Date Prepared?	(44-81)	
31	**LEGEND:** Shown? Do symbols match the drawing? Abbreviations?	(44-104)	
32	**LOCATION MAP:** Shown? Complete & Correct? Scale Given? North arrow or same rotation?	(44-98)	
33	**LEGIBILITY PROBLEMS? The final plat must be capable of producing clean and legible copies.**	SOP	
34	**OUTSIDE BOUNDARY LINES:** Bold and Apparent?	(44-94)	
35	**ADJOINING PROPERTIES:** Owner's Name? D.Bk/Pg. (Instr #)? Departing Lines?	SOP, (44-93,94)	
36	**ADJOINING PROPERTIES:** Subdiv. Name? Lot No.? M.Bk/Pg (Instr#)? Departing Lines?	SOP	
37	**LOT NUMBERS:** New Numbers Correct? Old Numbers Correct?	(44-99)	
38	**LOT LINES:** Old Lot Lines Shown? Old Deed Lines Shown?	SOP	
39	**EX STRUCTURES:** Shown? Other physical features? P/L Violated? Esmt. Violated?	SOP, (44-97)	
40	**CITY LIMITS:** Lines Shown? Labeled properly? Change line type or label?	-----	

PLAT REVIEW CHECKLIST
Engineering Department

	Items (√ = Yes X = No --- = Not Applicable) √ - see comments sheet	MSR	Correction Required?
	UTILITY EASEMENTS & STREAM SETBACKS		
41	**STANDARD DRAINAGE & UTILITY ESMT DEDICATIONS**: 10 Ft Exterior? 5 Ft Interior?	(69-10)	
42	**SINKHOLE:** Shown? Esmt 5' from closed contour? Labeled? P/L Ties? Impacts other properties?	(44-95, 65-30)	
43	**EXISTING EASEMENTS:** Shown? Bk/Pg? Width? B&D? P/L Ties?	(44-95)	
44	**F-1 ZONE:** Shown & Labeled as "Approximate"? Correct Permanent Drainage Esmt. Noted? No Filling or Buildings Noted?	(65-40)	
45	**FLOODPLAIN INFO:** Is flood panel number and panel date shown? Creek correctly identified?	(44-97)	
46	**FLOODPLAIN INFO:** 100-Year Floodplain boundary shown? 500-Year Floodplain boundary shown?	(44-97)	
47	**NO-FILL LINE:** Shown Correctly?	EP-21	
48	**BLUE-LINE STREAM:** Check USGS quadrangle map to determine "Waters Of The State"? Classified / declassified by TDEC letter?	Ord 22.5	
49	**RIPARIAN BUFFER ZONE:** Shown? Dimensioned from TOP OF BANK? Labeled as "Riparian Buffer Zone"?	Ord 22.5	
50	**GREENWAY:** Easement Shown Correctly? Width? B&D? P/L Ties?	(44-95)	
	CPMSF & STORMWATER ORDINANCE (Section 22.5-34 of the city code)		
51	**STORM DRAIN LINES SHOWN:** Existing/Proposed? Labeled? Storm Drain Esmts (shown)? P/L Ties?	(44-95)	
52	**STORMWATER DETENTION:** >1 acre Comm? >5 lots Resid? >5 acres Resid? >1/2 acre Imperv?	Ord 22.5	
53	**DETENTION BASIN ESMT:** Plotted & Labeled? B&D? Area? Access Esmt Needed?	EP-05	
54	**DETENTION BASIN OUTLET:** Outlet structure & culvert shown? Storm Drain Esmts? B&D?	EP-05	
55	**FIRST FLUSH / SPAP:** Required?	Ord 22.5	
56	**WATER QUALITY FACILITY ESMT:** Plotted & Labeled? B&D? Area (in sq.ft.)?	EP-05	
57	**WATER QUALITY FACILITY ESMT:** Min Esmt Size 20' x 20'? Access Esmt Needed? Each Esmt Labeled?	EP-05	
58	**P/L Ties?** Owner's Responsibility Note? Recorded Covenant Inst #?	EP-05	
59	**20' Traversable Access Esmt Shown and Labeled**? Matches Design Plans?	EP-05 / EP-06	
	TITLE BLOCK AND GENERAL INFORMATION		
60	**PROPERTY OWNER'S NAME**, Address and Phone Number Shown?	(44-103)	
60	**SURVEYOR'S NAME**, Address and Phone Number Shown? Fax/E-Mail?	(44-103)	
61	**SUBDIVISION NAME?** Unit #? If Resub, indicated in title OR note ? "Final Plat of _____" ?	(44-101)	
62	**DEED REFERENCE? TOTAL NUMBER OF LOTS? Total Sq. Ft/Acreage?**	(44-102)	
63	**Correct Ward #? Correct City Block? Correct CLT #?**	(44-102)	

STAMPS - (See MSR 44-110 through 44-118)	Provided?	MSR reference
Surveyor's Seal (in accordance with SOP)		SOP
Property Owner		44-111
Notary Stamp for Property Owner Signature		44-111
Surveyor's signature - Construction complete/incomplete		44-112.3
Certification of Category 1 Survey (1:10,000 or better)		44-112.5
Knox County Health Department (sanitary sewers)		44-113
Zoning (MPC official zoning map)		44-114
Inspection of completed streets & related improvements		44-115.1
Inspection of completed drainage systems		44-115.2
Guarantee to complete streets & related improvements		44-115.3
Guarantee to complete drainage systems		44-115.4
Special Pollution Abatement		Knoxville LDM
No easements to release : *RLS certification*		-----
Easement release : City		44-115.7
City & County Taxes		44-118
MPC Addressing		44-115.9
Engineering Division approval		44-115.10

See the Land Development Manual, Appendix C (Engineering Policies) online at -- **http://www.cityofknoxville.org/engineering/**
Survey control points are available at City Engineering website -- http://www.cityofknoxville.org/engineering/civil/surveypoints.asp
KGIS allows viewing/printing of interactive maps & property information (**http://www.kgis.org**) as a service called KnoxnetWhere?.

PLAT REVIEW CHECKLIST
Engineering Department

City Block # _____
MPC File # _____

Review checklist thoroughly for correction comments. **After making any necessary changes, you will need to resubmit another plat through MPC for review.** The Engineering Department will sign either a legible mylar or paper copy. Stickyback adhesives are unacceptable. The correction of any errors or deficiencies not discovered during review remains the responsibility of the registered land surveyor.
Identify all significant changes to Engineering Division ASAP to avoid delays for plat approval & signatures.

COMMENTS:

FINAL PLAT SIGNED BY/DATE:

PLAT REVIEW CHECKLIST
Engineering Department

Date received:_____ JPE page #: _____

Checked by: _____

Ward/City Block: _____ Date reviewed: _____

Subdiv. Name: _____

Surveyor: _____ Surveyor's Dwg. #: _____

JPE REVIEW
Attach one page per JPE per plat

CITY OF KNOXVILLE

See Minimum Subdivision Regulations, Section 64-24, for Joint Permanent Easements.

REQUIREMENTS FOR ALL JOINT PERMANENT EASEMENTS:

- ❑ Fit in with context of neighborhood and road pattern.
- ❑ Joint permanent easement approved by the Law Dept.; recorded; recording reference noted on plat.
- ❑ Joint permanent easement width – 40 foot minimum.
- ❑ Joint permanent easement right-of-way lines shown via dashed lines.
- ❑ More than 5 lots on joint permanent easement must be zoned PR.
- ❑ All dead end joint permanent easements shall provide a suitable turnaround meeting AASHTO guidelines.
- ❑ Sight distance shall be adequate as specified in Section 62-88.
- ❑ The area of the joint permanent easement shall not be included in computing the lot area. The plat shall identify both the total area of the lot and the area excluding the access easement.

THE FOLLOWING NOTES MUST BE PLACED ON *ALL* PLATS with JPE's

- ❑ Joint permanent easement is not a public road and will not be maintained by the City.
- ❑ Joint permanent easement will also function as a utility easement.
- ❑ Surveyor to certify the grade on the plat by way of a note. Grade of the JPE must be traversable with a maximum grade of 12% or less. A road profile may be necessary.
- ❑ Surveyor to certify on the plat that sight distance on the intersecting public road meets the Minimum Subdivision Regulations.
- ❑ The appropriate stamp (MSR 44-115) must be placed on the plat for road construction.
- ❑ A Homeowner's Association or other legal entity shall be established that addresses the maintenance of the easement. Maintenance agreement approved, recorded, recording referenced on plat.

REQUIREMENTS FOR 5 LOTS OR LESS

- ❑ The pavement is to be 20' wide minimum with an all-weather surface as specified by the City. List the width, depth and type of pavement. In the City, improvements must be bonded.

REQUIREMENTS FOR OVER 5 LOTS

- ❑ Meets public road standards, except as exempted or varied by MPC. **List the width, depth and type of pavement and curbing on the plat**. In the City, improvements must be bonded.
- ❑ Street names – **"JOINT PERMANENT EASEMENT"** labeled in large letters, with easement name smaller and in parentheses.
- ❑ A road profile shall be required. If JPE does not conform to the public or other legal entity road standards of Section 62, a variance must be obtained from MPC with the City Engineering Dept approval. The pavement is to be 26' wide, but may be reduced to 22' in width with an approved MPC variance.

MAJOR SUBDIVISIONS:

YES	NO	
____	____	Bench Mark and Elevation No. Required.
____	____	Concrete Monument
____	____	Street Bond
____	____	Drainage Bond
____	____	Street Complete

Comments:

CITY OF KNOXVILLE

Site Inspection Checklist

Inspection # _____ Final? – Yes / No

Date: _____ Time: _____ Weather: _____

Construction inspector: _____

Project Name/Address: _____

Erosion and Sediment Control:

		Yes	No	N/A
1.	Is there a good stand of grass on all areas disturbed by construction?			
2.	Is there a good stand of grass within all ditches and swales?			
3.	Is there a good stand of grass within the detention basin?			
4.	Are erosion and sediment control devices properly installed at the correct locations?			
5.	Is there any evidence of erosion or sedimentation downstream from the project site?			
6.	Are all slopes less than 2:1?			

Storm Drainage Structures: (catch basins, inlets, manholes, junction boxes)

		Yes	No	N/A
1.	Are all drainage structures installed at the proper location per approved plans?			
2.	Are all drainage structures installed at the proper grade and cross slope?			
3.	Are curb irons and manhole lids installed correctly? Proper size?			
4.	Do curb irons and manhole lids have anti-pollution message per COK standard details?			
5.	Are structure inverts shaped to prevent ponding water? Free from silt and debris?			
6.	Are pipes properly grouted and fitted into each drainage structure?			

Storm Drainage Pipes:

		Yes	No	N/A
1.	Has the proper aggregate backfill been used (Class A Grade D)? Adequately compacted?			
2.	Does pipe size and pipe material agree with the approved plans?			
3.	Does the location and grade of storm drainage pipes agree with the approved plans?			
4.	Are pipe sections joined correctly (coupling bands for CMP, joints, gaskets, etc.)			
5.	Are pipes in good condition and undamaged?			
6.	Has proper outlet protection been installed? Headwalls, riprap with filter fabric, or other erosion control measures.			

Ditches and Swales:

		Yes	No	N/A
1.	Are the ditches and swales located per the approved plans?			
2.	Does the constructed cross section (width, depth) agree with the approved plans?			
3.	Are erosion control measures in place? Riprap with filter fabric.			

Stormwater Quality Structures: (O/W separator, catch basin inserts, etc.)

		Yes	No	N/A
1.	Is the correct brand, size, and model installed as per approved plans?			
2.	Is the structure installed at correct location, grade and elevation as per approved plans?			
3.	Is the structure located within the designated easement? Is access easement free from obstructions and traversable?			
4.	Are lift holes plugged and all joints sealed to prevent leakage?			
5.	Has buffer zone been maintained throughout construction, or as required by approved plans and the Stormwater and Street Ordinance?			

Stormwater Detention Basin:

		Yes	No	N/A
1.	Was Detention Basin installed as first item of construction, to prevent erosion/sediment?			
2.	Does the basin size and location agree with the approved plans & detention calculations?			
3.	Is the basin located within the detention basin easement, including fill and cut slopes?			
4.	Is the bottom of the detention basin graded to the outlet structure to prevent ponding?			
5.	Is there a good cover of vegetation on the slopes and bottom (to prevent erosion)?			
6.	Is the outlet structure constructed to agree with approved plans & detention calculations?			
7.	Are the detention basin slopes at the approved grades (no steeper than 2:1 H:V)?			
8.	Is the detention basin berm graded at the proper elevation and width, all the way around?			
9.	Is the first flush volume adequate? With a controlled release over 24 hours?			
10.	Is there any evidence of utility lines or pipes within the detention basin easement?			
11.	Has the traversable access easement been constructed per approved plan?			

Streets:

		Yes	No	N/A
1.	Are streets in good condition and free from damage? (no cracks, upheaval or settlement)			
2.	Are the streets located correctly as per approved plans? Curves (PC, PT, tangents)?			
3.	Are the street widths adequate?			
4.	Does the street cross section (pavement and base depths) meet the approved plans?			
5.	Are streets crowned and gutters graded properly to prevent ponding?			
6.	Has the curb been backfilled?			
7.	Is there a good stand of grass within the street right-of-way?			
8.	Are street signs in compliance with City and FHWA standards and installed properly?			
9.	Are pavement markings, lines and symbols correct?			
10.	Have streetlights been installed correctly with adequate setbacks?			
11.	Have property pins been set and protected?			
12.	Are entrance signs and other structures located outside of the street right-of-way?			

Curbs and Sidewalks in Right of Way:

		Yes	No	N/A
1.	Are curbs and sidewalks in good condition and free from damage?			
2.	Does the location, type, and height of curb and gutter agree with the approved plans?			
3.	Are the curb and sidewalk radii and curves correct for all entrances and cross streets?			
4.	Are curb contraction joints installed with 5 ft maximum spacing?			
5.	Are curb expansion joints installed with 25 ft maximum spacing and at fixed objects?			
6.	Is the sidewalk width and location adequate?			
7.	Are sidewalk cross sections adequate, with proper finishing and joints?			
8.	Do sidewalk ramps and cuts installed meet ADA and City of Knoxville requirements?			

Entrances and Driveways:

		Yes	No	N/A
1.	Do the entrance and driveway widths match the approved plans?			
2.	Are the entrance and driveway radii adequate for each property?			
3.	Are the entrance and driveway cross sections adequate, with proper finishing and joints?			
4.	Are sight distances adequate, with no obstacles such as trees, fences or signs?			

Retaining Walls:

		Yes	No	N/A
1.	Has the contractor been notified of 3rd party inspection requirements for MSE walls?			
2.	Are retaining walls located as per approved plans?			
3.	Do the retaining walls footer size and steel reinforcement match design plans?			
4.	Do the retaining walls agree with the approved height, length, and construction material?			

CITY OF KNOXVILLE

Development Certification Checklist

Date: _____ Property owner: _____

Certifying engineer: _____ Certifying surveyor (as-built): _____

Project name: _____

Address: _____

The Development Certification process is necessary in order for a construction bond or performance bond to be released, as described in the City of Knoxville Stormwater Ordinance (Chapter 22.5 of the City Code) in Section 22.5-27(k). Also see Section 13.5 of the Land Development Manual for a list of construction bond release requirements.

Certification Requirements:		Date
A. **Submit as-built drawings which meet the minimum requirements of this checklist.**		
B. **Submit complete detention calculations (signed & stamped by professional engineer) showing that the as-built conditions meet the minimum design criteria in the City of Knoxville Stormwater and Street Ordinance. Include all inputs and methods.**		
C. **Submit roadway material inspection reports by a qualified geotechnical firm (if not inspected directly by Knoxville Engineering Department).**		
D. **Conduct the final site inspection using the Site Inspection Checklist in Appendix A.**		
E. **Ensure that all roadway, drainage, detention basin, and water quality structure easements are properly delineated on a recorded plat. Check to see if CPMSF (maintenance agreement) is recorded at Knox County Register of Deeds and also denoted on the recorded plat.**		
F. **Submit retaining wall inspections/certifications for walls that affect right-of-way, dwelling structures, and/or stormwater facilities.**		

As-Built Drawings – General Information:

		Yes	No	N/A
1.	Does title block have same project name, address, and contact persons as original plans?			
2.	Are seal and signature for the certifying Engineer & Surveyor shown on as-built drawings?			
3.	Does each as-built drawing contain survey benchmarks or other reference points?			
4.	Does each as-built drawing contain a north arrow and bar scale?			
5.	Does each as-built drawing contain the Engineer's & Surveyor's Certification Statements? Are the statements filled out?			
6.	Are slopes greater than 2:1 certified by an engineer?			

As-Built Drawings - Storm Drainage Structures:

		Yes	No	N/A
1.	Are all drainage pipes and structures located correctly on the drawings?			
2.	Is each drainage pipe labeled with slope, length, size or diameter, material, inverts?			
3.	Is each drainage structure labeled with top and invert elevations, size, material, detail #, and coordinates based on a known control system?			
4.	Is pump system data included? (location, pump make and model, capacity, switch design, inlet and discharge sizes, maximum & minimum water surface, and head-flow curves)			

As-Built Drawings - Water Quality Structures:

		Yes	No	N/A
1.	Is the structure located correctly on plan view, with labeled facility & access easements?			
2.	Are the manufacturer's identification number, make, model, and size shown on plans?			
3.	Are specification sheets, operation instructions, and maintenance guidelines provided?			

As-Built Drawings - Detention Basins:

		Yes	No	N/A
1.	Do all plan views correctly show detention basin at a readable scale, with 1-foot contours?			
2.	Are locations and invert elevations for all pipe/ditch outfalls into detention basin shown?			
3.	Are detention basin and access easements shown and labeled? Are all conflicts avoided?			
4.	Does the plan include accurate details of outlet structures, including all orifices and weirs, such as size, diameter, invert elevation, means of anchoring, underdrain systems, etc?			
5.	Does the model show pre developed and post developed soil types, CN, Tc, drainage areas, etc…? Is a map included showing the pre developed and post developed drainage areas?			
6.	Does the model use the reduced as-built volume per the ordinance? Is the as-built volume and reduced volume shown in a table?			
7.	Does the model compare pre developed peak flows to as-built peak flows?			
8.	Are First Flush calculations included? Is First Flush volume and 24-72 hour draw down time provided?			
8.	Does detention basin adequately attenuate the 1, 2 , 5, 10, 25, and 100-year storm events?			
9.	Has minimum freeboard of 1 foot been provided between 100-year storm and top of berm?			

As-Built Drawings - Public Streets and Joint Permanent Easements:

		Yes	No	N/A
1.	Are street right-of-way, easement boundaries, and street centerlines shown and labeled?			
2.	Are all structures within the public right-of-way or public easement shown and labeled? (such as: pavement, curb, gutter, inlet, catch basin, manhole, pipe, streetlight, retaining wall, pole, sidewalk, large tree, utility structure, structural sign, or ornamental structure)			
3.	Is a street profile provided (to scale) with the as-built elevations at 50' increments, or as necessary, to ensure a smooth profile? Are street grades and K values provided?			
4.	Is the typical street cross-section shown with widths and all pavement depths?			

As-Built Drawings – Retaining Walls:

		Yes	No	N/A
1.	Are walls located on the as-built drawings with top and bottom wall elevations shown?			
2.	Has a certification/inspection letter, geotechnical reports, calculations, and drawing been provided for as-built walls that affect right-of-way, dwelling structures, and/or stormwater facilities?			
3.	Do the as-built calculations show a factor of safety of 3.0 for field tested bearing capacity, 2.0 for overturning, and 1.5 for sliding?			
4.	Do the as-built drawings for the wall show a typical detail, profile view, footing size/type, material used to construct wall, steel layout, geo-grid type, geo-grid embedment depth, backfill material, drain locations, dimensions of wall, etc…?			

CITY OF KNOXVILLE
DEPT. OF ENGINEERING
215-2148

PERMIT CONSTRUCTION WITHIN RIGHT-OF-WAY

CITY OF KNOXVILLE

DATE APPLIED: _____ PERMIT NUMBER: _____

APPLICANT
NAME: _____
ADDRESS: _____
PHONE NUMBER: _____

Example permit

OWNER
NAME: _____
ADDRESS: _____
PHONE NUMBER: _____

Do not fill this form out. This is a blank copy of the actual permit to be issued. Information is entered into the permits database, so that all information is printed electronically.

LOCATION OF WORK
STREET ADDRESS: _____
WARD: _____ CITY BLOCK: _____ ZONE: _____
CLT NUMBER: _____ LOT SIZE: _____

CONSTRUCTION TYPE

DRIVEWAY	PAVEMENT CUT	STORM SEWER
SIDEWALK	CURB & GUTTER	OTHER _____
UTILITY CONNECTION	DRAIN DITCH	

STARTING DATE:
SIZE (SPECIFY DIMENSIONS OF WORK):

REQUIREMENTS

THE APPLICANT HEREBY AGREES TO COMPLY WITH ALL PROVISIONS OF THE CODE, ORDINANCES, SPECIFICATIONS, AND REGULATIONS OF THE CITY OF KNOXVILLE, TENNESSEE.

ALL WORK SHALL BE PERFORMED BY A LICENSED AND BONDED CONTRACTOR.

THIS PERMIT SHALL BECOME VOID IF CONSTRUCTION HAS NOT BEGUN WITHIN 10 DAYS OF NOTED ANTICIPATED STARTING DATE. PERMIT EXPIRES 90 DAYS FROM DATE OF APPLICATION.

A PLAN OR TYPICAL SKETCH SHALL ACCOMPANY ALL PERMITS.

APPLICANT'S SIGNATURE _____

APPLICATION APPROVED _____ PERMIT DATE _____
DIRECTOR OF ENGINEERING

BY _____ PERMIT FEE _____

BUILDING PERMIT NUMBER PAYMENT _____

FEE WAIVED? REASON

INSPECTION NOTES _____

CITY OF KNOXVILLE

FLOODPLAIN DEVELOPMENT PERMIT

Example of issued permit

DATE: _____ PERMIT NUMBER: _____

APPLICANT NAME: _____

ADDRESS: _____

PHONE NO: _____

Do not fill this form out. It will be filled out by Engineering Dept personnel on original form in quadruplicate at time of issuance.

LOCATION OF WORK: _____

STREET ADDRESS: _____

CITY WARD: _____ CITY BLOCK: _____ LOT SIZE: _____

CLT NUMBER: _____ PROPERTY ZONING: _____

PROPOSED USE OF THIS PROPERTY: _____

DESCRIPTION OF PROJECT: _____

NAME OF STREAM OR RIVER: _____ APPROX FEET MARKER: _____

FLOOD WATER SURFACE ELEVATIONS: 100-YEAR _____ 500-YEAR _____

SOURCE OF DATA FOR WATER SURFACE ELEVATIONS: _____

==========

SITE DEVELOPMENT REQUIREMENTS:

REFERENCES: ZONING ORDINANCE FOR KNOXVILLE, TENNESSEE
FLOOD DAMAGE PREVENTION AND CONTROL ORDINANCE (CHAPTER 12)

1. THE REQUIRED MINIMUM FLOOR ELEVATION IS _____ FEET ABOVE MEAN SEA LEVEL (NAVD 1988 DATUM). THIS ELEVATION MUST BE CERTIFIED BY A PROFESSIONAL ENGINEER OR LAND SURVEYOR (REGISTERED IN THE STATE OF TENNESSEE).
2. THE REQUIRED FLOODPROOF ELEVATION IS _____ FEET ABOVE MEAN SEA LEVEL (NAVD 1988 DATUM). THIS ELEVATION MUST BE CERTIFIED BY A PROFESSIONAL ENGINEER OR LAND SURVEYOR (REGISTERED IN THE STATE OF TENNESSEE).
3. THE ELEVATION MUST BE CERTIFIED BY: _____ (DATE)
4. IF THE MINIMUM FLOOR ELEVATION IS NOT FULLY CONSTRUCTED AND CERTIFIED BY THE SPECIFIED DATE, THEN A **STOP WORK ORDER** WILL BE ISSUED.

==========

I, THE UNDERSIGNED, UNDERSTAND THAT THE ISSUANCE OF THIS PERMIT IS CONTINGENT UPON THE ABOVE REQUIREMENTS BEING MET. I AGREE THAT THE DEVELOPMENT WILL COMPLY WITH ALL APPLICABLE PROVISIONS OF THE "ZONING ORDINANCE OF KNOXVILLE, TENNESSEE" AND THAT ALL OTHER LAWS AND ORDINANCES (WHETHER LOCAL, STATE OR FEDERAL) AFFECTING THE PROPOSED DEVELOPMENT.

I FURTHER UNDERSTAND THAT IF THESE REQUIREMENTS ARE NOT MET, THEN A **STOP WORK ORDER** MAY BE ISSUED BY THE DIRECTOR OF ENGINEERING OR THE CHIEF BUILDING OFFICIAL.

APPLICANT'S SIGNATURE: _____ DATE: _____

APPLICATION APPROVED BY: _____ DATE: _____

SITE DEVELOPMENT PERMIT

APPLICATION DATE: **PERMIT NUMBER:**
TITLE: **REVIEWED BY:**

OWNER OR AGENT:
PHONE NUMBER:
ADDRESS:

CONTRACTOR NAME:
PHONE NUMBER:
ADDRESS:

CONTACT NAME:
PHONE NUMBER:

Example permit

Do not fill this form out. This is a blank copy of the actual permit to be issued. Information is entered into the permits database, so that all information is printed electronically.

MAINTENANCE AGREEMENT: Y/N **PERFORMANCE BOND AMOUNT:**
LOCATION OF WORK:
WARD: **CITY BLOCK:** **ZONE:** **CLT NUMBER:**

REQUIREMENTS:

1. **This permit does _____ does not ____ constitute approval for entrance design, curbing, parking layout, building location and setbacks.**
2. **Adequately sized drainage swales must be maintained by contractor during and after construction along all appropriate property lines.**
3. **Adequate erosion and sediment control measures must be maintained by the contractor during and after construction as required by Section 22.5-27 of the City of Knoxville Stormwater and Street Ordinance. Erosion control measures must be in accordance with the "Tennessee Erosion and Sediment Control Handbook", Tennessee Department of Environment and Conservation (TDEC).**
4. **Earthen slopes may be no greater than 2 to 1 at any time. Construct slopes per approved grading plan.**
5. **This permit expires one year from date of issue.**
6. **Additional requirements my be required by the field inspector at the time of construction or inspection.**
7. **Plans must be revised and approved in writing by the City of Knoxville, Department of Engineering, prior to implementing changes in the field.**
8. **This permit does not constitute approval of utility installations and modifications which are obtained from the utility owner.**
9. **Statewide TN ONE-CALL utility location service is 1-800-351-1111; allow three working days.**

REMARKS:

Example permit

APPROVALS

DRAINAGE DESIGN: _____ **EROSION CONTROL:** _____ **ARBORIST:** _____

ZONING: _____ **USE ON REVIEW:** _____

I, THE UNDERSIGNED OWNER OR AGENT, UNDERSTAND ALL OF THE REQUIREMENTS STATED ON THIS PERMIT AND ANY ATTACHED SITE PLANS AND/OR LETTERS. I ALSO UNDERSTAND THAT FAILURE TO COMPLY WITH THESE REQUIREMENTS MAY RESULT IN A CIVIL PENALTY BY THE CITY OF KNOXVILLE OF NOT LESS THAN FIFTY DOLLARS ($50) OR NOT MORE THAN FIVE THOUSAND DOLLARS ($5,000) PER DAY FOR EACH DAY OF VIOLATION. EACH DAY OF VIOLATION SHALL CONSTITUTE A SEPARATE VIOLATION.

_____
SIGNATURE OF OWNER OR AGENT

PERMIT FEE:

PAYMENT: _____

DATE: _____

_____
PERMIT ISSUED BY:

DATE: _____

Example permit

RECEIVED BY: _____

City of Knoxville Department of Engineering
http://www.knoxvilletn.gov/engineering/
P.O. Box 1631, Suite 480
City County Building
Knoxville, TN 37901
(865) 215-2148 Office / 215-2631 Fax
(865) 215-4147 Water Quality Hotline

OFFICIAL

NOTICE OF VIOLATION

No. 98XXXX

CITY OF KNOXVILLE

Name: _____ has been found to be in violation of the City of Knoxville's Stormwater and Street Ordinance

Section(s): [ ]22.5-26 [ ]22.5-30[ ]22.5-52[ ]22.5-53 [ ] Other (see back of NOV)

Location of Violation(s) (provide sufficient information for identification of where violation has occurred): _____

_____

Description of violation(s): [ ] Inadequate Erosion/Sediment Controls [ ] Non-compliance with Approved Permit [ ] Illegal Dumping/Discharge

[ ] Ilicit Connection[ ] Grading / Filling without Permit, **10 TIMES STANDARD PERMIT FEE REQUIRED** (See Section 22.5-29 on reverse)

[ ] Other _____

_____

Work, remediation, or repair ordered to comply with the City Code: [ ] Stop Discharge / Dumping [ ] Provide Incident Report by ____/____/_____.

[ ] Remediate/Remove Discharged Material or Sediment from street / catch basin / drainageway / etc. by ____/____/_____.

[ ] Provide Spill Pollution Prevention Plan by ____/____/_____. [ ] Correct Erosion and Sediment Controls by ____/____/_____.

[ ] _____

_____

_____

Name: _____ is hereby served with this Notice of Violation on ____/____/_____, and ordered to correct the violation(s) or to stop work until the Engineering Department approves the continuance of work. Illegal Discharges Must Stop Immediately. As described above, all remediation, repair, or necessary work required to comply with the City Code must be completed by ____/____/_____ unless specified otherwise. The above work, remediation, or repair does not preclude assessment of penalties and/or reimbursement of the City of Knoxville's related expenses/damages.

Notification received by: _____ Title (if applicable):

This order served by: _____ **Date and Time** ____/____/_____ at ____:____ am/pm

Original - On-site person or signer above. Yellow – Engineering Division. Pink - Law Department. Goldenrod - Owner/Developer/Responsible Party

==========

Due to Federal Mandate 40 CFR 122.26(d)(2)(iv)(B) and to State of Tennessee NPDES Permit No. TNS068055, the City of Knoxville is required to detect, remove, prohibit and enforce any non-stormwater discharges to the municipal separate storm drain system unless the illicit discharge or illegal dumping is specifically exempted or covered by an individual NPDES permit.

According to the City of Knoxville Code, Chapter 22.5 (entitled Stormwater and Street Ordinance):

Section 22.5-8

a) Any person violating the provisions of this chapter shall be guilty of a misdemeanor and punished as provided in the general provisions of the City Code. Each day that a continuing violation of this chapter is maintained or permitted to remain shall constitute a separate offense.

b) Any person violating the provisions of this chapter may be assessed a civil penalty by the City of not less than fifty dollars ($50.00) or more than five thousand dollars ($5,000.000) per day for each day of violation. Each day of violation constitutes a separate violation.

Section 22.5-26

No person shall:

a) Grade, dump, alter natural or existing topography, move or place fill material, excavate, remove any vegetation not exempted by the Tree Protection Ordinance, or begin any site development activities without first obtaining a site development permit from the Department of Engineering.

b) Alter any natural or manmade drainage system so as to divert, constrict, increase or change in any manner the natural or existing flow of any stream, or natural or existing drainage of any area without obtaining a site development permit from the Department of Engineering.

c) Commence site development and/or construction of any building or structure without obtaining a site development permit from the Department of Engineering.

d) Clear any site by means that causes disturbance of soil without first obtaining a site development permit from the Department of Engineering.

Section 22.5-29

c) The fee for a site development permit issued after site development has begun without a permit shall be ten times the standard fee.

Section 22.5-30

No person shall perform site development work that does not conform to an approved site development plan.

Section 22.5-52

(a) No person shall

(1) Connect, or allow to be connected, any sanitary sewer to the stormwater system, including any sanitary sewer connected to the stormwater system as of the date of adoption of this chapter.

(2) Cause or allow an illicit discharge to the stormwater system, or any component thereof, or onto driveways, sidewalks, parking lots, sinkholes, creek banks, or other areas draining to the stormwater system.

Section 22.5-53

As soon as any person has knowledge of any illicit spills or discharges to the stormwater system in violation of this chapter, such person shall immediately notify the Engineering Director by telephone of this discharge. If such person is directly or indirectly responsible for such discharge or responsible for the operation of the system or business, then such person shall also take immediate action to ensure the containment and cleanup of such discharge and shall confirm such telephone notification with a written report to the Engineering Director within three (3) calendar days. At a minimum, the written report for any illicit discharge shall include: 1) Date and time of the discharge, 2) Location of the discharge, 3) Material or substance discharged, 4) Duration and rate of flow, 5) Total volume discharged, 6) Total volume recovered, 7) Cause or reason for the discharge, 8) Remediation and containment action taken, 9) Material Safety Data Sheets (MSDS) for the discharged material, 10) Action taken to prevent further discharges, and 11)Description of any environmental impact.

City of Knoxville
Stormwater Management

Special Pollution Abatement Permit (SPAP)

Facility Pollution Prevention Program
www.knoxvilletn.gov/engineering/
(Chapter 22.5 of the Knoxville City Code)

Please Submit Check with Knoxville Special Pollution Abatement Permit.	**Date_____**	**Fee _$100_**

Submit information for application of a Knoxville Special Pollution Abatement Permit to comply with the following:

A. Enter the legal or official name of the facility. Do not use colloquial name.
B. Give the mailing address and physical location of facility. Determine watershed name, city block number and CLT number.
C. For sections 1-10, include the supporting information in the box provided or attach an exhibit labeling which section it is in reference to. Provide complete data in a legible and clearly organized format.
D. Verify that the certification on this permit is read, thoroughly understood, and signed by the appropriate persons.

A) Name of Facility:
B) Mailing Address: **Physical Location:** **Watershed Name:** **City Block Number:** **CLT Number:**

C) Supporting Information:

1. Name of contact person for permit compliance, including job title, address, and phone numbers. The contact person shall be responsible for keeping records of incidents such as significant spills of toxic pollutants or other discharges which may affect stormwater runoff quality. The contact person shall document and record all inspections and maintenance activities.

2. Description of facility, nature of work performed, and type of facility.

3. Site map of facility with buildings, parking, drives, materials loading and access areas, dumpsters, type of each impervious surface, ditches, pipes, catch basins, drainage basin limits, area of facility, acreage of offsite water draining onto facility, discharge points to "Waters of the State" or "Community Waters" with name of the water or channel. This map will be a minimum scale of 1"=50'.

SWM USE ONLY (Engineering Department) **Form: SPAP 05/03**

Date Received:	**Reviewer:**	
Date of Coverage:	**Expiration Date:**	**Permit Number:**

4. Submit a plan of instruction provided to employees at all levels within the company in methods to prevent stormwater runoff pollution. The plan shall identify periodic dates for such training and methods used. Submit a site-specific spill protection plan that deals with actual hazardous materials and emergency response equipment at the site.

5. A narrative description of significant materials (as defined by 40 CFR 122.26) that are currently or in the past have been treated, stored or disposed outside; method of onsite storage or disposal; materials management practices used to minimize contact of these materials with stormwater runoff for the past three years; materials loading and access area; material disposal areas, location and description of existing structural and non-structural control measures to reduce pollutants in stormwater runoff; and a description of any treatment the stormwater receives.

6. Include a record of available sampling data describing pollutants in stormwater discharges. Carefully research using historical data from previous owner/operator, government records, and investigation reports.

7. Include a preventive maintenance program that includes regular inspection and maintenance of all stormwater management devices (such as cleaning grit chambers and catch basins). Maintenance program shall also include inspecting and testing plant equipment and systems to uncover conditions that could potentially cause breakdowns or failures resulting in discharges of pollutants to surface waters or to groundwater.

8. Submit a maintenance schedule of sweeping or vacuuming of facility to prevent washout from deposited emissions laden with hydrocarbons, oxides, salts, metals, worn pavement particulates, hydrocarbons for leaks and spills, trash, debris, garbage, metal, tire particles, brake lining particles and various chemicals from the wear and deterioration of vehicles. In the event of remedial work or action, submit a cleanup schedule for debris or material storage areas.

9. Description of other ways the facility plans to implement programs to reduce the discharge of pollutants into stormwater runoff. Provide estimated quantity of stormwater flow, direction of flow, and an estimate of the types of pollutants which are likely to be present in stormwater discharges associated with industrial activity for each area of the facility. Designate each area of the facility as having high, medium or low potential for stormwater pollution and explain rationale.

10. Include plans, details and specifications that show construction of new structures to protect discharge outfalls into "Waters of the State" or into "Community Waters". Common examples include an appropriately-sized grit chamber, oil skimmer, oil/water separator, media filtration inserts, etc. Vegetative measures such as grassed swales, constructed wetlands, existing woods or a detention basin are commonly used to supplement structural measures.

D) Certification and signatures:

CERTIFICATION AND SIGNATURE (MUST BE SIGNED BY PRESIDENT, OWNER, OR RANKING OFFICIAL)

"I certify under penalty of law that I have personally examined and am familiar with the information submitted in this document and attached exhibits. Based on my inquiry of those individuals immediately responsible for obtaining the information, I believe that the submitted information is true, accurate and complete. I am aware that there are significant penalties for submitting false information, including the possibility of a fine or imprisonment."

Printed Name:_____ Title:_____

Signature:_____ Date:_____

ACCEPTANCE OF RESPONSIBILITY FOR PERMIT COMPLIANCE (MUST BE SIGNED BY CONTACT PERSON)

"I also certify under penalty of law that I have personally examined and am familiar with the information submitted in this document and attached exhibits. Based on my investigations, I believe that the submitted information is true, accurate and complete. I am aware that there are significant penalties for submitting false information, including the possibility of a fine or imprisonment."

Printed Name:_____ Title:_____

Signature:_____ Date:_____

(a) Some facilities which are not yet constructed may not have selected a permanent contact person who will ultimately be responsible for permit compliance. In these instances, the contact person may be a technical person within the company who is generally responsible for environmental compliance issues.

(b) The president, owner, or other ranking official who certifies this document is responsible for keeping the City of Knoxville up-to-date concerning the name of the contact person. The president, owner, or other ranking official who certifies this document is also responsible for notifying the City of Knoxville if he is no longer an official with the company.

If any information changes or is subsequently found to be in error, please resubmit necessary pages of the Special Pollution Abatement Permit application along with new signatures and dates.

Permit expires five years from the date of issuance, or as noted on the first page of this permit

---

Submit this permit application promptly to the following address:

City of Knoxville
Engineering Department
Stormwater Management
P.O. Box 1631
Knoxville, TN 37901

Telephone: (865) 215-2148
Fax: (865) 215-2631
Suite 480, City County Building

Form: SPAP 05/03

Stormwater Management
Special Pollution Abatement

Food Handling and Facilities

Permit

Processing

http://www.knoxvilletn.gov/engineering/

(Chapter 22.5 of the Knoxville City Code)

SWM USE ONLY (Engineering Department)

Date Received:	**Fee: $100 Paid on:**	**Reviewer:**
Date of Coverage:	**Expiration Date:**	**Permit Number:**
Watershed:	**City Block#:**	**CLT:**

I. Type of facility: [ ] Restaurant [ ] Cafeteria [ ] Grocery Store [ ] Food Processing Facility [ ] Other

II.	**Name of facility:**				
Mailing Address of Facility:		Street	City	State	Zip
Physical Address of Facility:		Street	City	State	Zip

III.	**Contact Information**	Name:		Title:	
Address:		Street	City	State	Zip
Phone:		Fax:	E-mail:		

A map of the facility is attached with all stormwater facilities noted: [ ] Yes [ ] No

Please check each box to indicate that you understand, agree to, and will enforce the corresponding control at the facility. **Please provide a detailed justification for any unchecked box.**

IV. Dumpsters/Grease Bins

BMP's: AM-01, AM-07, IC-01, IC-07, IC-10

Structural Controls

- ❑ A. Dumpster pads will be constructed with a raised surface (at least 2" – 3") to prevent run-on from the surrounding paved area.
- ❑ B. No storm drain grates or inlets shall be constructed within the dumpster pad.
- ❑ C. Water Spigot or supply will not be installed unless a sanitary waste line is also installed. The sewer utility must approve all waste connections in the dumpster pad area.

Management Controls

- ❑ D. Dumpster lids and doors shall be kept closed when not in use and drain plugs shall be in place at all times.
- ❑ E. Only dry material shall be disposed in dumpsters.
- ❑ F. Dumpster pads shall be inspected at least weekly and any potential illicit discharges or spills shall be cleaned immediately to prevent non-stormwater discharges to the storm drain system.
- ❑ G. Grease bins shall be placed away from storm drain grates or inlets and inspected daily for spills, drippings, or potential illicit discharges to the storm drain system. Any spilled material shall be cleaned immediately in such a way that prevents non-stormwater discharges to the storm drain system.

V. Kitchen Exhaust System **BMP's: AM-01, IC-11, IC-12**

Structural Controls

- ❑ A. Secondary grease trapping device will be installed around all roof mounted exhaust vents.
- ❑ B. Check Brand/Model: _____

Management Controls

- ❑ C. The secondary grease trapping device will be inspected **monthly** and cleaned out according to manufacturer's recommendations or as necessary.
- ❑ D. Any wastewater generated from the cleaning of hoods, plenums, filters, baffles, exhaust stacks, roof fans, and all other kitchen exhaust system components shall be contained before it enters the storm drain system and disposed of properly without any discharge to the stormdrain system.

VI. Parking Area / Drive-Thru / Loading Dock **BMP's: AM-01, AM-07, IC-01, IC-07, IC-8**

Structural Controls

- ❑ A. Stormwater treatment device (e.g., catch basin inserts, vault separation device, etc.), will be installed to treat runoff from all drainage basins.
- ❑ B. List Brand, Model, & Location of Units:_____

Management Controls

- ❑ C. Stormwater treatment facilities will be inspected monthly and cleaned out according to manufacturer's instructions or as necessary. Documented maintenance records will be stored on site and made available to inspectors.
- ❑ D. All wastewater from parking area and/or drive-thru cleaning will be contained before it enters the storm drain system and disposed of properly.
- ❑ E. Pressure washing will be prohibited or not used. A vacuum or other manual/mechanical method will be used to clean the parking area and/or drive-thru lane.
- ❑ F. Mop water shall be disposed of indoors to a floor drain, sink, or other sanitary sewer drain, or disposed in a grassy or landscaped area large enough to allow all wastewater to infiltrate the ground.
- ❑ G. Overflows from grease traps onto the ground shall be cleaned immediately in such a way that prohibits any non-stormwater discharges to the storm drain system.

VIII. Certification and signatures:

"I certify under penalty of law that I have personally examined and am familiar with the information submitted in this document and attached exhibits. Based on my inquiry of those individuals immediately responsible for obtaining the information, I believe that the submitted information is true, accurate and complete. I am aware that there are significant penalties for submitting false information, including the possibility of a fine or imprisonment."

Name:_____ Title:_____
(President, Owner, or Ranking Official)

Signature:_____ Date:_____

……

Name:_____ Title:_____
(Contact Person)

Signature:_____ Date:_____

If any information changes or is subsequently found to be in error, please resubmit necessary pages of the Special Pollution Abatement Permit application along with new signatures and dates.

Stormwater Management
Special Pollution Abatement Permit

Vehicle & Equipment Facilities

http://www.knoxvilletn.gov/engineering/
(Chapter 22.5 of the Knoxville City Code)

SWM USE ONLY (Engineering Department)

Date Received:	**Fee: $100 Paid on:**	**Reviewer:**
Date of Coverage:	**Expiration Date:**	**Permit Number:**
Watershed:	**City Block#:**	**CLT:**

I. Type of facility: [ ] Vehicle/Equipment Dealership/Storage [ ] Fueling Station [ ] Repair Shop [ ] Other

II.	**Name of facility:**			
Mailing Address of Facility:	Street	City	State	Zip
Physical Address of Facility:	Street	City	State	Zip

III.	**Contact Information**	Name:	Title:	
Address:	Street	City	State	Zip
Phone:	Fax:	E-mail:		

A map of the facility is attached with all stormwater facilities noted: [ ] Yes [ ] No

Please check each box to indicate that you understand, agree to, and will enforce the corresponding control at the facility. **Please provide a detailed justification for any unchecked box.**

IV. Parking Area & Loading Dock

BMP's: AM-01, AM-07, IC-01, IC-03, IC-04, & IC-8

Structural Controls

- ❑ A. Stormwater treatment facilities (e.g., catch basin inserts, vault separation device, etc.), will be installed to treat runoff from all drainage basins.
- ❑ B. List Brand, Model, & Location of Units:_____
- ❑ C. List flow rates for site or sub-basin: 1 yr/24 hour storm = _____ 10 yr/24 hour storm = _____
- ❑ D. Verified treatment flow of the unit = _____ & total bypass flow = _____.

Management Controls

- ❑ E. Stormwater treatment facilities with low storage capacity (e.g. inserts, sumps, skimmers, etc.) will be inspected at least monthly and cleaned out at least quarterly. Documented maintenance records will be stored on site and made available to inspectors.
- ❑ F. Stormwater treatment facilities with large storage capacity (e.g. vaults, o/w separators, etc.) will be inspected at least quarterly and cleaned out at least annually. Documented maintenance records will be stored on site and made available to inspectors.
- ❑ G. If pressure washing is necessary, all wastewater will be properly disposed in a sanitary sewer or by other acceptable methods. No wash water will ever be discharged to the stormwater system.

V. Vehicle Maintenance — BMP's: RH-01, RH-02, & RH-03

Structural Controls

- ❑ A. All interior drains must discharge to sanitary sewer.
- ❑ B. An emergency spill prevention kit will be maintained on site.
- ❑ C. All repair work must be completed under cover.

Management Controls

- ❑ D. All wastewater from washing vehicles will be disposed properly, preferably using the indoor drains.
- ❑ E. All illicit discharges will be cleaned up promptly and reported to the City of Knoxville's Water Quality Hotline (215-4147).
- ❑ F. All leaking vehicles will be moved indoors, or a drop cloth or drip pan will be used to prevent any automotive fluids from entering the storm drain system.

VI. Dumpsters — BMP's: AM-01, AM-07, & IC-10

Structural Controls

- ❑ A. Dumpster pads will be constructed with a raised surface (at least 2" – 3") to prevent run-on from the surrounding paved area.
- ❑ B. No storm drain grates or inlets shall be constructed within the dumpster pad.
- ❑ C. Water Spigot or supply will not be installed unless sanitary waste line is also provided.

Management Controls

- ❑ D. Dumpster lids and doors shall be kept closed when not in use and drain plugs shall be in place at all times.
- ❑ E. Only dry material shall be disposed in dumpsters.
- ❑ F. Dumpster pads shall be inspected at least weekly and any potential illicit discharges or spills shall be cleaned immediately to prevent non-stormwater discharges to the storm drain system.

VII. Certification and signatures:

"I certify under penalty of law that I have personally examined and am familiar with the information submitted in this document and attached exhibits. Based on my inquiry of those individuals immediately responsible for obtaining the information, I believe that the submitted information is true, accurate and complete. I am aware that there are significant penalties for submitting false information, including the possibility of a fine or imprisonment."

Name:_____ Title:_____
(President, Owner, or Ranking Official)

Signature:_____ Date:_____

……

Name:_____ Title:_____
(Contact Person)

Signature:_____ Date:_____

If any information changes or is subsequently found to be in error, please resubmit necessary pages of the Special Pollution Abatement Permit application along with new signatures and dates.

Stormwater Management
Special Pollution Abatement Permit

Vehicle Wash Facilities

http://www.knoxvilletn.gov/engineering/
(Chapter 22.5 of the Knoxville City Code)

SWM USE ONLY (Engineering Department)

Date Received:	**Fee: $100 Paid on:**	**Reviewer:**
Date of Coverage:	**Expiration Date:**	**Permit Number:**
Watershed:	**City Block#:**	**CLT:**

I.	**Name of facility:**			
Mailing Address of Facility:	Street	City	State	Zip
Physical Address of Facility:	Street	City	State	Zip

II.	**Contact Information**	Name:		Title:	
Address:	Street		City	State	Zip
Phone:		Fax:	E-mail:		

A map of the facility is attached with all stormwater facilities noted: [ ] Yes [ ] No

Please check each box to indicate that you understand, agree to, and will enforce the corresponding control at the facility. **Please provide a detailed justification for any unchecked box.**

III. Parking Area & Loading Dock

BMP's: AM-01, AM-07, IC-01, IC-03, IC-04, & IC-8

Structural Controls

- ❑ A. Stormwater treatment facilities (e.g., catch basin inserts, vault separation device, etc.), will be installed to treat runoff from all drainage basins.
- ❑ B. List Brand, Model, & Location of Units:_____
- ❑ C. List flow rates for site or sub-basin: 1 yr/24 hour storm = _____ 10 yr/24 hour storm = _____
- ❑ D. Verified treatment flow of the unit = _____ & total bypass flow = _____.

Management Controls

- ❑ E. Stormwater treatment facilities with low storage capacity (e.g. inserts, sumps, skimmers, etc.) will be inspected at least monthly and cleaned out at least quarterly. Documented maintenance records will be stored on site and made available to inspectors.
- ❑ F. Stormwater treatment facilities with large storage capacity (e.g. vaults, o/w separators, etc.) will be inspected at least quarterly and cleaned out at least annually. Documented maintenance records will be stored on site and made available to inspectors.

- ❑ G. All wastewater from parking area will be contained before it enters the storm drain system and disposed of properly.
- ❑ I. Sweeper vacuum or other manual/mechanical method will be used to clean the parking area.
- ❑ J. Outside pressure washing will only be allowed if the wastewater does not discharge to the MS4.

IV. Certification and signatures:

"I certify under penalty of law that I have personally examined and am familiar with the information submitted in this document and attached exhibits. Based on my inquiry of those individuals immediately responsible for obtaining the information, I believe that the submitted information is true, accurate and complete. I am aware that there are significant penalties for submitting false information, including the possibility of a fine or imprisonment."

Name:_____ Title:_____
(President, Owner, or Ranking Official)

Signature:_____ Date:_____

……

Name:_____ Title:_____
(Contact Person)

Signature:_____ Date:_____

If any information changes or is subsequently found to be in error, please resubmit necessary pages of the Special Pollution Abatement Permit application along with new signatures and dates.

V. Please provide justifications for any unchecked boxes.

_____
_____
_____
_____
_____
_____
_____
_____
_____
_____
_____
_____
_____
_____
_____
_____
_____
_____
_____
_____
_____

Stormwater Management
Special Pollution Abatement Permit

Large Parking Lot Facilities

http://www.knoxvilletn.gov/engineering/
(Chapter 22.5 of the Knoxville City Code)

SWM USE ONLY (Engineering Department)

Date Received:	**Fee: $100 Paid on:**	**Reviewer:**
Date of Coverage:	**Expiration Date:**	**Permit Number:**
Watershed:	**City Block#:**	**CLT:**

I. Type of facility: [ ] Large Parking Lot [ ] Warehouse [ ] Other

II.	**Name of facility:**				
Mailing Address of Facility:	Street	City	State	Zip	
Physical Address of Facility:	Street	City	State	Zip	

III.	**Contact Information**	Name:	Title:	
Address:	Street	City	State	Zip
Phone:	Fax:	E-mail:		

A map of the facility is attached with all stormwater facilities noted: [ ] Yes [ ] No

Please check each box to indicate that you understand, agree to, and will enforce the corresponding control at the facility. **Please provide a detailed justification for any unchecked box.**

IV. Parking Area & Loading Dock

BMP's: AM-01, AM-07, IC-01, IC-03, IC-04, & IC-8

Structural Controls

- ❑ A. Stormwater treatment facilities (e.g., catch basin inserts, vault separation device, etc.), will be installed to treat runoff from all drainage basins.
- ❑ B. List Brand, Model, & Location of Units:_____
- ❑ C. List flow rates for site or sub-basin: 1 yr/24 hour storm = _____ 10 yr/24 hour storm = _____
- ❑ D. Verified treatment flow of the unit = _____ & total bypass flow = _____.

Management Controls

- ❑ E. Stormwater treatment facilities with low storage capacity (e.g. inserts, sumps, skimmers, etc.) will be inspected at least monthly and cleaned out at least quarterly. Documented maintenance records will be stored on site and made available to inspectors.
- ❑ F. Stormwater treatment facilities with large storage capacity (e.g. vaults, o/w separators, etc.) will be inspected at least quarterly and cleaned out at least annually. Documented maintenance records will be stored on site and made available to inspectors.
- ❑ G. All wastewater from parking area and/or loading dock cleaning will be contained before it enters the storm drain system and disposed of properly.
- ❑ H. Pressure washing will be prohibited or not used. A vacuum or other manual/mechanical method will be used to clean the parking area and/or loading dock.

V. Dumpsters BMP's: AM-01, AM-07, & IC-10

Structural Controls

- ❑ A. Dumpster pads will be constructed with a raised surface (at least 2" – 3") to prevent run-on from the surrounding paved area.
- ❑ B. No storm drain grates or inlets shall be constructed within the dumpster pad.
- ❑ C. Water Spigot or supply will not be installed unless sanitary waste line is also provided.

Management Controls

- ❑ D. Dumpster lids and doors shall be kept closed when not in use and drain plugs shall be in place at all times.
- ❑ E. Only dry material shall be disposed in dumpsters.
- ❑ F. Dumpster pads shall be inspected at least weekly and any potential illicit discharges or spills shall be cleaned immediately to prevent non-stormwater discharges to the storm drain system.

VII. Certification and signatures:

"I certify under penalty of law that I have personally examined and am familiar with the information submitted in this document and attached exhibits. Based on my inquiry of those individuals immediately responsible for obtaining the information, I believe that the submitted information is true, accurate and complete. I am aware that there are significant penalties for submitting false information, including the possibility of a fine or imprisonment."

Name:_____ Title:_____
(President, Owner, or Ranking Official)

Signature:_____ Date:_____

……

Name:_____ Title:_____
(Contact Person)

Signature:_____ Date:_____

If any information changes or is subsequently found to be in error, please resubmit necessary pages of the Special Pollution Abatement Permit application along with new signatures and dates.

FEMA

NATIONAL FLOOD INSURANCE PROGRAM

ELEVATION CERTIFICATE

AND

INSTRUCTIONS

NATIONAL FLOOD INSURANCE PROGRAM
ELEVATION CERTIFICATE

PAPERWORK REDUCTION ACT NOTICE

Public reporting burden for this data collection is estimated to average 3.75 hours per response. The burden estimate includes the time for reviewing instructions, searching existing data sources, gathering and maintaining the data needed, and completing and submitting this form. You are not required to respond to this collection of information unless a valid OMB control number is displayed on this form. Send comments regarding the accuracy of the burden estimate and any suggestions for reducing the burden to: Information Collections Management, Department of Homeland Security, Federal Emergency Management Agency, 500 C Street SW, Washington DC 20472, Paperwork Reduction Project (1660-0008). **NOTE: Do not send your completed form to this address.**

PURPOSE OF THE ELEVATION CERTIFICATE

The Elevation Certificate is an important administrative tool of the National Flood Insurance Program (NFIP). It is to be used to provide elevation information necessary to ensure compliance with community floodplain management ordinances, to determine the proper insurance premium rate, and to support a request for a Letter of Map Amendment (LOMA) or Letter of Map Revision based on fill (LOMR-F).

The Elevation Certificate is required in order to properly rate Post-FIRM buildings, which are buildings constructed after publication of the Flood Insurance Rate Map (FIRM), located in flood insurance Zones A1-A30, AE, AH, A (with BFE), VE, V1-V30, V (with BFE), AR, AR/A, AR/AE, AR/A1-A30, AR/AH, and AR/AO. The Elevation Certificate is not required for Pre-FIRM buildings unless the building is being rated under the optional Post-FIRM flood insurance rules.

As part of the agreement for making flood insurance available in a community, the NFIP requires the community to adopt floodplain management regulations that specify minimum requirements for reducing flood losses. One such requirement is for the community to obtain the elevation of the lowest floor (including basement) of all new and substantially improved buildings, and maintain a record of such information. The Elevation Certificate provides a way for a community to document compliance with the community's floodplain management ordinance.

Use of this certificate does not provide a waiver of the flood insurance purchase requirement. Only a LOMA or LOMR-F from the Federal Emergency Management Agency (FEMA) can amend the FIRM and remove the Federal mandate for a lending institution to require the purchase of flood insurance. However, the lending institution has the option of requiring flood insurance even if a LOMA/LOMR-F has been issued by FEMA. The Elevation Certificate may be used to support a LOMA or LOMR-F request. Lowest floor and lowest adjacent grade elevations certified by a surveyor or engineer will be required if the certificate is used to support a LOMA or LOMR-F request. A LOMA or LOMR-F request must be submitted with either a completed FEMA MT-EZ or MT-1 package, whichever is appropriate.

This certificate is used only to certify building elevations. A separate certificate is required for floodproofing. Under the NFIP, non-residential buildings can be floodproofed up to or above the Base Flood Elevation (BFE). A floodproofed building is a building that has been designed and constructed to be watertight (substantially impermeable to floodwaters) below the BFE. Floodproofing of residential buildings is not permitted under the NFIP unless FEMA has granted the community an exception for residential floodproofed basements. The community must adopt standards for design and construction of floodproofed basements before FEMA will grant a basement exception. For both floodproofed non-residential buildings and residential floodproofed basements in communities that have been granted an exception by FEMA, a floodproofing certificate is required.

Additional guidance can be found in FEMA Publication 467-1, Floodplain Management Bulletin: Elevation Certificate, available on FEMA's website at http://www.fema.gov/library/viewRecord.do?id=1727.

U.S. DEPARTMENT OF HOMELAND SECURITY
Federal Emergency Management Agency
National Flood Insurance Program

ELEVATION CERTIFICATE

Important: Read the instructions on pages 1-9.

OMB No. 1660-0008
Expires March 31, 2012

SECTION A - PROPERTY INFORMATION

	For Insurance Company Use:
A1. Building Owner's Name	Policy Number
A2. Building Street Address (including Apt., Unit, Suite, and/or Bldg. No.) or P.O. Route and Box No.	Company NAIC Number

City State ZIP Code

A3. Property Description (Lot and Block Numbers, Tax Parcel Number, Legal Description, etc.)

A4. Building Use (e.g., Residential, Non-Residential, Addition, Accessory, etc.) _____

A5. Latitude/Longitude: Lat. _____ Long. _____ Horizontal Datum: ☐ NAD 1927 ☐ NAD 1983

A6. Attach at least 2 photographs of the building if the Certificate is being used to obtain flood insurance.

A7. Building Diagram Number_____

A8. For a building with a crawlspace or enclosure(s):
- a) Square footage of crawlspace or enclosure(s) _____ sq ft
- b) No. of permanent flood openings in the crawlspace or enclosure(s) within 1.0 foot above adjacent grade _____
- c) Total net area of flood openings in A8.b _____ sq in
- d) Engineered flood openings? ☐ Yes ☐ No

A9. For a building with an attached garage:
- a) Square footage of attached garage _____ sq ft
- b) No. of permanent flood openings in the attached garage within 1.0 foot above adjacent grade _____
- c) Total net area of flood openings in A9.b _____ sq in
- d) Engineered flood openings? ☐ Yes ☐ No

SECTION B - FLOOD INSURANCE RATE MAP (FIRM) INFORMATION

B1. NFIP Community Name & Community Number	B2. County Name	B3. State

B4. Map/Panel Number	B5. Suffix	B6. FIRM Index Date	B7. FIRM Panel Effective/Revised Date	B8. Flood Zone(s)	B9. Base Flood Elevation(s) (Zone AO, use base flood depth)

B10. Indicate the source of the Base Flood Elevation (BFE) data or base flood depth entered in Item B9.
☐ FIS Profile ☐ FIRM Community Determined ☐ Other (Describe) _____

B11. Indicate elevation datum used for BFE in Item B9: ☐ NGVD 1929 ☐ NAVD 1988 ☐ Other (Describe) _____

B12. Is the building located in a Coastal Barrier Resources System (CBRS) area or Otherwise Protected Area (OPA)? ☐ Yes ☐ No
Designation Date_____ ☐ CBRS ☐ OPA

SECTION C - BUILDING ELEVATION INFORMATION (SURVEY REQUIRED)

C1. Building elevations are based on: ☐ Construction Drawings* ☐ Building Under Construction* ☐ Finished Construction
*A new Elevation Certificate will be required when construction of the building is complete.

C2. Elevations – Zones A1-A30, AE, AH, A (with BFE), VE, V1-V30, V (with BFE), AR, AR/A, AR/AE, AR/A1-A30, AR/AH, AR/AO. Complete Items C2.a-h below according to the building diagram specified in Item A7. Use the same datum as the BFE.

Benchmark Utilized _____ Vertical Datum_____

Conversion/Comments _____

		Check the measurement used.	
a)	Top of bottom floor (including basement, crawlspace, or enclosure floor) _____.____	☐ feet	☐ meters (Puerto Rico only)
b)	Top of the next higher floor _____.____	☐ feet	☐ meters (Puerto Rico only)
c)	Bottom of the lowest horizontal structural member (V Zones only) _____.____	☐ feet	☐ meters (Puerto Rico only)
d)	Attached garage (top of slab) _____.____	☐ feet	☐ meters (Puerto Rico only)
e)	Lowest elevation of machinery or equipment servicing the building (Describe type of equipment and location in Comments) _____.____	☐ feet	☐ meters (Puerto Rico only)
f)	Lowest adjacent (finished) grade next to building (LAG) _____.____	☐ feet	☐ meters (Puerto Rico only)
g)	Highest adjacent (finished) grade next to building (HAG) _____.____	☐ feet	☐ meters (Puerto Rico only)
h)	Lowest adjacent grade at lowest elevation of deck or stairs, including structural support _____.____	☐ feet	☐ meters (Puerto Rico only)

SECTION D - SURVEYOR, ENGINEER, OR ARCHITECT CERTIFICATION

This certification is to be signed and sealed by a land surveyor, engineer, or architect authorized by law to certify elevation information. *I certify that the information on this Certificate represents my best efforts to interpret the data available. I understand that any false statement may be punishable by fine or imprisonment under 18 U.S. Code, Section 1001.*

☐ Check here if comments are provided on back of form.

Were latitude and longitude in Section A provided by a licensed land surveyor? ☐ Yes ☐ No

Certifier's Name License Number

Title Company Name

Address City State ZIP Code

Signature Date Telephone

PLACE SEAL HERE

IMPORTANT: In these spaces, copy the corresponding information from Section A.			For Insurance Company Use:
Building Street Address (including Apt., Unit, Suite, and/or Bldg. No.) or P.O. Route and Box No.			Policy Number
City	State	ZIP Code	Company NAIC Number

SECTION D - SURVEYOR, ENGINEER, OR ARCHITECT CERTIFICATION (CONTINUED)

Copy both sides of this Elevation Certificate for (1) community official, (2) insurance agent/company, and (3) building owner.

Comments

Signature Date

☐ Check here if attachments

SECTION E - BUILDING ELEVATION INFORMATION (SURVEY NOT REQUIRED) FOR ZONE AO AND ZONE A (WITHOUT BFE)

For Zones AO and A (without BFE), complete Items E1-E5. If the Certificate is intended to support a LOMA or LOMR-F request, complete Sections A, B, and C. For Items E1-E4, use natural grade, if available. Check the measurement used. In Puerto Rico only, enter meters.

E1. Provide elevation information for the following and check the appropriate boxes to show whether the elevation is above or below the highest adjacent grade (HAG) and the lowest adjacent grade (LAG).
a) Top of bottom floor (including basement, crawlspace, or enclosure) is _____. ____ ☐ feet ☐ meters ☐ above or ☐ below the HAG.
b) Top of bottom floor (including basement, crawlspace, or enclosure) is _____. ____ ☐ feet ☐ meters ☐ above or ☐ below the LAG.

E2. For Building Diagrams 6-9 with permanent flood openings provided in Section A Items 8 and/or 9 (see pages 8-9 of Instructions), the next higher floor (elevation C2.b in the diagrams) of the building is _____ . ____ ☐ feet ☐ meters ☐ above or ☐ below the HAG.

E3. Attached garage (top of slab) is _____. _____ ☐ feet ☐ meters ☐ above or ☐ below the HAG.

E4. Top of platform of machinery and/or equipment servicing the building is _____. ____ ☐ feet ☐ meters ☐ above or ☐ below the HAG.

E5. Zone AO only: If no flood depth number is available, is the top of the bottom floor elevated in accordance with the community's floodplain management ordinance? ☐ Yes ☐ No ☐ Unknown. The local official must certify this information in Section G.

SECTION F - PROPERTY OWNER (OR OWNER'S REPRESENTATIVE) CERTIFICATION

The property owner or owner's authorized representative who completes Sections A, B, and E for Zone A (without a FEMA-issued or community-issued BFE) or Zone AO must sign here. *The statements in Sections A, B, and E are correct to the best of my knowledge.*

Property Owner's or Owner's Authorized Representative's Name

Address City State ZIP Code

Signature Date Telephone

Comments

☐ Check here if attachments

SECTION G - COMMUNITY INFORMATION (OPTIONAL)

The local official who is authorized by law or ordinance to administer the community's floodplain management ordinance can complete Sections A, B, C (or E), and G of this Elevation Certificate. Complete the applicable item(s) and sign below. Check the measurement used in Items G8 and G9.

G1. ☐ The information in Section C was taken from other documentation that has been signed and sealed by a licensed surveyor, engineer, or architect who is authorized by law to certify elevation information. (Indicate the source and date of the elevation data in the Comments area below.)

G2. ☐ A community official completed Section E for a building located in Zone A (without a FEMA-issued or community-issued BFE) or Zone AO.

G3. ☐ The following information (Items G4-G9) is provided for community floodplain management purposes.

G4. Permit Number	G5. Date Permit Issued	G6. Date Certificate Of Compliance/Occupancy Issued

G7. This permit has been issued for: ☐ New Construction ☐ Substantial Improvement

G8. Elevation of as-built lowest floor (including basement) of the building _____. _____ ☐ feet ☐ meters (PR) Datum_____

G9. BFE or (in Zone AO) depth of flooding at the building site _____. _____ ☐ feet ☐ meters (PR) Datum_____

G10. Community's design flood elevation _____. _____ ☐ feet ☐ meters (PR) Datum_____

Local Official's Name Title

Community Name Telephone

Signature Date

Comments

☐ Check here if attachments

Building Photographs

See Instructions for Item A6.

			For Insurance Company Use:
Building Street Address (including Apt., Unit, Suite, and/or Bldg. No.) or P.O. Route and Box No.			Policy Number
City	State	ZIP Code	Company NAIC Number

If using the Elevation Certificate to obtain NFIP flood insurance, affix at least two building photographs below according to the instructions for Item A6. Identify all photographs with: date taken; “Front View” and “Rear View”; and, if required, “Right Side View” and “Left Side View.” If submitting more photographs than will fit on this page, use the Continuation Page on the reverse.

Building Photographs

Continuation Page

			For Insurance Company Use:
Building Street Address (including Apt., Unit, Suite, and/or Bldg. No.) or P.O. Route and Box No.			Policy Number
City	State	ZIP Code	Company NAIC Number

If submitting more photographs than will fit on the preceding page, affix the additional photographs below. Identify all photographs with: date taken; “Front View” and “Rear View”; and, if required, “Right Side View” and “Left Side View.”

INSTRUCTIONS FOR COMPLETING THE ELEVATION CERTIFICATE

The Elevation Certificate is to be completed by a land surveyor, engineer, or architect who is authorized by law to certify elevation information when elevation information is required for Zones A1-A30, AE, AH, A (with BFE), VE, V1-V30, V (with BFE), AR, AR/A, AR/AE, AR/A1-A30, AR/AH, or AR/AO. Community officials who are authorized by law or ordinance to provide floodplain management information may also complete this form. For Zones AO and A (without BFE), a community official, a property owner, or an owner's representative may provide information on this certificate, unless the elevations are intended for use in supporting a request for a LOMA or LOMR-F. Certified elevations must be included if the purpose of completing the Elevation Certificate is to obtain a LOMA or LOMR-F.

The property owner, the owner's representative, or local official who is authorized by law to administer the community floodplain ordinance can complete Section A and Section B. The partially completed form can then be given to the land surveyor, engineer, or architect to complete Section C. The land surveyor, engineer, or architect should verify the information provided by the property owner or owner's representative to ensure that this certificate is complete.

In Puerto Rico only, elevations for building information and flood hazard information may be entered in meters.

SECTION A – PROPERTY INFORMATION

Items A1-A4. This section identifies the building, its location, and its owner. Enter the name(s) of the building owner(s), the building's complete street address, and the lot and block numbers. If the building's address is different from the owner's address, enter the address of the building being certified. If the address is a rural route or a Post Office box number, enter the lot and block numbers, the tax parcel number, the legal description, or an abbreviated location description based on distance and direction from a fixed point of reference. For the purposes of this certificate, "building" means both a building and a manufactured (mobile) home.

A map may be attached to this certificate to show the location of the building on the property. A tax map, FIRM, or detailed community map is appropriate. If no map is available, provide a sketch of the property location, and the location of the building on the property. Include appropriate landmarks such as nearby roads, intersections, and bodies of water. For building use, indicate whether the building is residential, non-residential, an addition to an existing residential or non-residential building, an accessory building (e.g., garage), or other type of structure. Use the Comments area of the appropriate section if needed, or attach additional comments.

Item A5. Provide latitude and longitude coordinates for the center of the front of the building. Use either decimal degrees (e.g., 39.5043°, -110.7585°) or degrees, minutes, seconds (e.g., 39° 30' 15.5", -110° 45' 30.7") format. If decimal degrees are used, provide coordinates to at least 4 decimal places or better. When using degrees, minutes, seconds, provide seconds to at least 1 decimal place or better. The latitude and longitude coordinates must be accurate within 66 feet. When the latitude and longitude are provided by a surveyor, check the "Yes" box in Section D and indicate the method used to determine the latitude and longitude in the Comments area of Section D. If the Elevation Certificate is being certified by other than a licensed surveyor, engineer, or architect, this information is not required. Provide the type of datum used to obtain the latitude and longitude. FEMA prefers the use of NAD 1983.

Item A6. If the Elevation Certificate is being used to obtain flood insurance through the NFIP, the certifier must provide at least two photographs showing the front and rear of the building taken within 90 days from the date of certification. The photographs must be taken with views confirming the building description and diagram number provided in Section A. To the extent possible, these photographs should show the entire building including foundation. If the building has split-level or multi-level areas, provide at least two additional photographs showing side views of the building. In addition, when applicable, provide a photograph of the foundation showing a representative example of the flood openings or vents. All photographs must be in color and measure at least 3"x3". Digital photographs are acceptable.

Item A7. Select the diagram on pages 7-9 that best represents the building. Then enter the diagram number and use the diagram to identify and determine the appropriate elevations requested in Items C2.a-h. If you are unsure of the correct diagram, select the diagram that most closely resembles the building being certified.

Item A8.a Provide the square footage of the crawlspace or enclosure(s) below the lowest elevated floor of an elevated building with or without permanent flood openings. Take the measurement from the outside of the crawlspace or enclosure(s). Examples of elevated buildings constructed with crawlspace and enclosure(s) are shown in Diagrams 6-9 on pages 8-9. Diagram 2, 4, or 9 should be used for a building constructed with a crawlspace floor that is below the exterior grade on all sides.

Items A8.b-d Enter in Item A8.b the number of permanent flood openings in the crawlspace or enclosure(s) that are no higher than 1.0 foot above the higher of the exterior or interior grade or floor immediately below the opening. (A permanent flood opening is a flood vent or other opening that allows the free passage of water automatically in both directions without human intervention.) If the interior grade elevation is used, note this in the Comments area of Section D. Estimate the total net area of all such permanent flood openings in square inches, excluding any bars, louvers, or other covers of the permanent flood openings, and enter the total in Item A8.c. If the net area cannot be reasonably estimated, provide the size of the flood openings without consideration of any covers and indicate in the Comments area the type of cover that exists in the flood openings. Indicate in Item A8.d whether the flood openings are engineered. If applicable, attach a copy of the Individual Engineered Flood Openings Certification or an Evaluation Report issued by the International Code Council Evaluation Service (ICC ES), if you have it. If the crawlspace or enclosure(s) have no permanent flood openings, or if the openings are not within 1.0 foot above adjacent grade, enter "0" (zero) in Items A8.b-c.

Item A9.a Provide the square footage of the attached garage with or without permanent flood openings. Take the measurement from the outside of the garage.

Items A9.b-d Enter in Item A9.b the number of permanent flood openings in the attached garage that are no higher than 1.0 foot above the higher of the exterior or interior grade or floor immediately below the opening. (A permanent flood opening is a flood vent or other opening that allows the free passage of water automatically in both directions without human intervention.) If the interior grade elevation is used, note this in the Comments area of Section D. This includes any openings that are in the garage door that are no higher than 1.0 foot above the adjacent grade. Estimate the total net area of all such permanent flood openings in square inches and enter the total in Item A9.c. If the net area cannot be reasonably estimated, provide the size of the flood openings without consideration of any covers and indicate in the Comments area the type of cover that exists in the flood openings. Indicate in Item A9.d whether the flood openings are engineered. If applicable, attach a copy of the Individual Engineered Flood Openings Certification or an Evaluation Report issued by the International Code Council Evaluation Service (ICC ES), if you have it. If the garage has no permanent flood openings, or if the openings are not within 1.0 foot above adjacent grade, enter "0" (zero) in Items A9.b-c.

SECTION B - FLOOD INSURANCE RATE MAP (FIRM) INFORMATION

Complete the Elevation Certificate on the basis of the FIRM in effect at the time of the certification.

The information for Section B is obtained by reviewing the FIRM panel that includes the building's location. Information about the current FIRM is available from the Federal Emergency Management Agency (FEMA) by calling 1-800-358-9616. If a Letter of Map Amendment (LOMA) or Letter of Map Revision (LOMR-F) has been issued by FEMA, please provide the letter date and case number in the Comments area of Section D or Section G, as appropriate.

For a building in an area that has been annexed by one community but is shown on another community's FIRM, enter the community name and 6-digit number of the annexing community in Item B1, the name of the county or new county, if necessary, in Item B2, and the FIRM index date for the annexing community in Item B6. Enter information from the actual FIRM panel that shows the building location, even if it is the FIRM for the previous jurisdiction, in Items B4, B5, B7, B8, and B9.

If the map in effect at the time of the building's construction was other than the current FIRM, and you have the past map information pertaining to the building, provide the information in the Comments area of Section D.

Item B1. NFIP Community Name & Community Number. Enter the complete name of the community in which the building is located and the associated 6-digit community number. For a newly incorporated community, use the name and 6-digit number of the new community. Under the NFIP, a "community" is any State or area or political subdivision thereof, or any Indian tribe or authorized native organization, that has authority to adopt and enforce floodplain management regulations for the areas within its jurisdiction. To determine the current community number, see the NFIP *Community Status Book*, available on FEMA's web site at http://www.fema.gov/fema/csb.shtm, or call 1-800-358-9616.

Item B2. County Name. Enter the name of the county or counties in which the community is located. For an unincorporated area of a county, enter "unincorporated area." For an independent city, enter "independent city."

Item B3. State. Enter the 2-letter state abbreviation (for example, VA, TX, CA).

Items B4-B5. Map/Panel Number and Suffix. Enter the 10-character "Map Number" or "Community Panel Number" shown on the FIRM where the building or manufactured (mobile) home is located. For maps in a county-wide format, the sixth character of the "Map Number" is the letter "C" followed by a four-digit map number. For maps not in a county-wide format, enter the "Community Panel Number" shown on the FIRM.

Item B6. FIRM Index Date. Enter the effective date or the map revised date shown on the FIRM Index.

Item B7. FIRM Panel Effective/Revised Date. Enter the map effective date or the map revised date shown on the FIRM panel. This will be the latest of all dates shown on the map. The current FIRM panel effective date can be determined by calling 1-800-358-9616.

Item B8. Flood Zone(s). Enter the flood zone, or flood zones, in which the building is located. All flood zones containing the letter "A" or "V" are considered Special Flood Hazard Areas. The flood zones are A, AE, A1-A30, V, VE, V1-V30, AH, AO, AR, AR/A, AR/AE, AR/A1-A30, AR/AH, and AR/AO. Each flood zone is defined in the legend of the FIRM panel on which it appears.

Item B9. Base Flood Elevation(s). Using the appropriate Flood Insurance Study (FIS) Profile, Floodway Data Table, or FIRM panel, locate the property and enter the BFE (or base flood depth) of the building site. If the building is located in more than one flood zone in Item B8, list all appropriate BFEs in Item B9. BFEs are shown on a FIRM or FIS Profile for Zones A1-A30, AE, AH, V1-V30, VE, AR, AR/A, AR/AE, AR/A1-A30, AR/AH, and AR/AO; flood depth numbers are shown for Zone AO. Use the AR BFE if the building is located in any of Zones AR/A, AR/AE, AR/A1-A30, AR/AH, or AR/AO. In A or V zones where BFEs are not provided on the FIRM, BFEs may be available from another source. For example, the community may have established BFEs or obtained BFE data from other sources for the building site. For subdivisions and other developments of more than 50 lots or 5 acres, establishment of BFEs is required by the community's floodplain management ordinance. If a BFE is obtained from another source, enter the BFE in Item B9. In an A Zone where BFEs are not available, complete Section E and enter N/A for Section B, Item B9. Enter the BFE to the nearest tenth of a foot (nearest tenth of a meter, in Puerto Rico).

Item B10. Indicate the source of the BFE that you entered in Item B9. If the BFE is from a source other than FIS Profile, FIRM, or community, describe the source of the BFE.

Item B11. Indicate the elevation datum to which the elevations on the applicable FIRM are referenced as shown on the map legend. The vertical datum is shown in the Map Legend and/or the Notes to Users on the FIRM.

Item B12. Indicate whether the building is located in a Coastal Barrier Resources System (CBRS) area or Otherwise Protected Area (OPA). (OPAs are portions of coastal barriers that are owned by Federal, State, or local governments or by certain non-profit organizations and used primarily for natural resources protection.) Federal flood insurance is prohibited in designated CBRS areas or OPAs for buildings or manufactured (mobile) homes built or substantially improved after the date of the CBRS or OPA designation. For the first CBRS designations, that date is October 1, 1983. Information about CBRS areas and OPAs may be obtained on the FEMA web site at http://www.fema.gov/business/nfip/cbrs/cbrs.shtm.

SECTION C - BUILDING ELEVATION INFORMATION (SURVEY REQUIRED)

Complete Section C if the building is located in any of Zones A1-A30, AE, AH, A (with BFE), VE, V1-V30, V (with BFE), AR, AR/A, AR/AE, AR/A1-A30, AR/AH, or AR/AO, or if this certificate is being used to support a request for a LOMA or LOMR-F. If the building is located in Zone AO or Zone A (without BFE), complete Section E instead. To ensure that all required elevations are obtained, it may be necessary to enter the building (for instance, if the building has a basement or sunken living room, split-level construction, or machinery and equipment).

Surveyors may not be able to gain access to some crawlspaces to shoot the elevation of the crawlspace floor. If access to the crawlspace is limited or cannot be gained, follow one of these procedures.

- Use a yardstick or tape measure to measure the height from the floor of the crawlspace to the "next higher floor," and then subtract the crawlspace height from the elevation of the "next higher floor." If there is no access to the crawlspace, use the exterior grade next to the structure to measure the height of the crawlspace to the "next higher floor."
- Contact the local floodplain administrator of the community in which the building is located. The community may have documentation of the elevation of the crawlspace floor as part of the permit issued for the building.
- If the property owner has documentation or knows the height of the crawlspace floor to the next higher floor, try to verify this by looking inside the crawlspace through any openings or vents.

In all three cases, provide the elevation in the Comments area of Section D on the back of the form and a brief description of how the elevation was obtained.

Item C1. Indicate whether the elevations to be entered in this section are based on construction drawings, a building under construction, or finished construction. For either of the first two choices, a post-construction Elevation Certificate will be

required when construction is complete. If the building is under construction, include only those elevations that can be surveyed in Items C2.a-h. Use the Comments area of Section D to provide elevations obtained from the construction plans or drawings. Select "Finished Construction" only when all machinery and/or equipment such as furnaces, hot water heaters, heat pumps, air conditioners, and elevators and their associated equipment have been installed and the grading around the building is completed.

Item C2. A field survey is required for Items C2.a-h. Most control networks will assign a unique identifier for each benchmark. For example, the National Geodetic Survey uses the Permanent Identifier (PID). For the benchmark utilized, provide the PID or other unique identifier assigned by the maintainer of the benchmark. For GPS survey, indicate the benchmark used for the base station, the Continuously Operating Reference Stations (CORS) sites used for an On-line Positioning User Service (OPUS) solution (also attach the OPUS report), or the name of the Real Time Network used.

Also provide the vertical datum for the benchmark elevation. All elevations for the certificate, including the elevations for Items C2.a-h, must use the same datum on which the BFE is based. Show the conversion from the field survey datum used if it differs from the datum used for the BFE entered in Item B9 and indicate the conversion software used. Show the datum conversion, if applicable, in this section or in the Comments area of Section D.

For property experiencing ground subsidence, the most recent reference mark elevations must be used for determining building elevations. However, when subsidence is involved, the BFE should not be adjusted. Enter elevations in Items C2.a-h to the nearest tenth of a foot (nearest tenth of a meter, in Puerto Rico).

Items C2.a-d Enter the building elevations (excluding the attached garage) indicated by the selected building diagram (Item A7) in Items C2.a-c. If there is an attached garage, enter the elevation for top of attached garage slab in Item C2.d. (Because elevation for top of attached garage slab is self-explanatory, attached garages are not illustrated in the diagrams.) If the building is located in a V zone on the FIRM, complete Item C2.c. If the flood zone cannot be determined, enter elevations for all of Items C2.a-h. For buildings in A zones, elevations a, b, d, and e should be measured at the top of the floor. For buildings in V zones, elevation c must be measured at the bottom of the lowest horizontal structural member of the floor (see drawing below). For buildings elevated on a crawlspace, Diagrams 8 and 9, enter the elevation of the top of the crawlspace floor in Item C2.a, whether or not the crawlspace has permanent flood openings (flood vents). *If any item does not apply to the building, enter "N/A" for not applicable.*

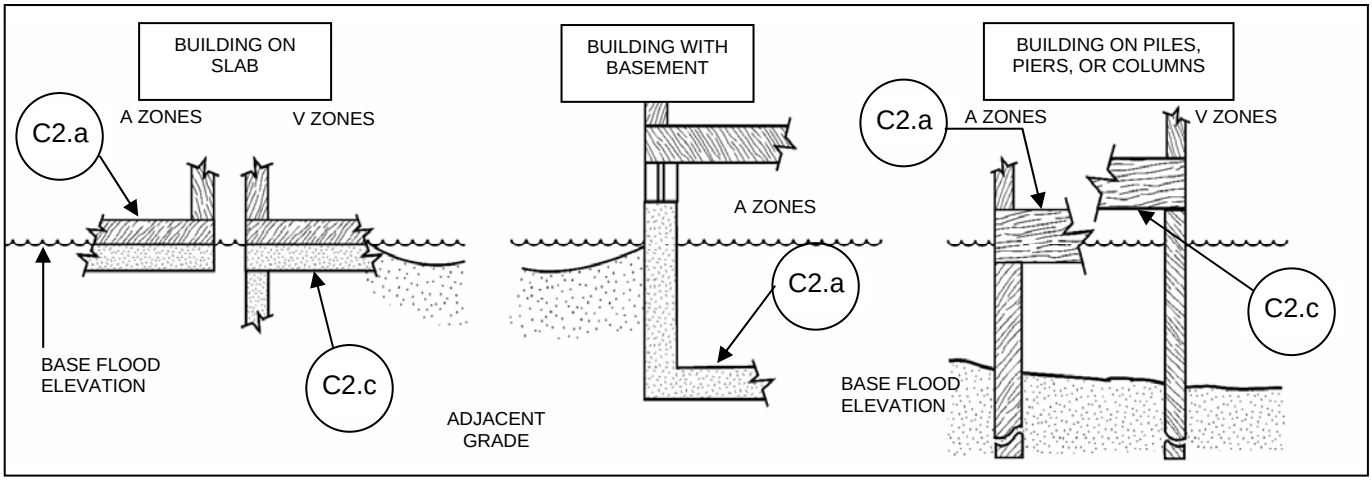

Item C2.e Enter the lowest platform elevation of at least one of the following machinery and equipment items: elevators and their associated equipment, furnaces, hot water heaters, heat pumps, and air conditioners in an attached garage or enclosure or on an open utility platform that provides utility services for the building. Note that elevations for these specific machinery and equipment items are required in order to rate the building for flood insurance. Local floodplain management officials are required to ensure that <u>all</u> machinery and equipment servicing the building are protected from flooding. Thus, local officials may require that elevation information for all machinery and equipment, including ductwork, be documented on the Elevation Certificate. If the machinery and/or equipment is mounted to a wall, pile, etc., enter the platform elevation of the machinery and/or equipment. Indicate machinery/equipment type and its general location, e.g., on floor inside garage or on platform affixed to exterior wall, in the Comments area of Section D or Section G, as appropriate. *If this item does not apply to the building, enter "N/A" for not applicable.*

Items C2.f-g Enter the elevation of the ground, sidewalk, or patio slab immediately next to the building. For Zone AO, use the natural grade elevation, if available. This measurement must be to the nearest tenth of a foot (nearest tenth of a meter, in Puerto Rico) if this certificate is being used to support a request for a LOMA or LOMR-F.

Item C2.h Enter the lowest grade elevation at the deck support or stairs. For Zone AO, use the natural grade elevation, if available. This measurement must be to the nearest tenth of a foot (nearest tenth of a meter, in Puerto Rico) if this certificate is being used to support a request for a LOMA or LOMR-F.

SECTION D - SURVEYOR, ENGINEER, OR ARCHITECT CERTIFICATION

Complete as indicated. This section of the Elevation Certificate may be signed by only a land surveyor, engineer, or architect who is authorized by law to certify elevation information. Place your license number, your seal (as allowed by the State licensing board), your signature, and the date in the box in Section D. You are certifying that the information on this certificate represents your best efforts to interpret the data available and that you understand that any false statement may be punishable by fine or imprisonment under 18 U.S. Code, Section 1001. Use the Comments area of Section D, on the back of the certificate, to provide datum, elevation, openings, or other relevant information not specified on the front.

SECTION E - BUILDING ELEVATION INFORMATION (SURVEY NOT REQUIRED) FOR ZONE AO & ZONE A (WITHOUT BFE)

Complete Section E if the building is located in Zone AO or Zone A (without BFE). Otherwise, complete Section C instead. Explain in the Section F Comments area if the measurement provided under Items E1- E4 is based on the "natural grade."

Items E1.a and b Enter in Item E1.a the height to the nearest tenth of a foot (tenth of a meter in Puerto Rico) of the top of the bottom floor (as indicated in the applicable diagram) above or below the highest adjacent grade (HAG). Enter in Item E1.b the height to the nearest tenth of a foot (tenth of a meter in Puerto Rico) of the top of the bottom floor (as indicated in the applicable diagram) above or below the lowest adjacent grade (LAG). For buildings in Zone AO, the community's floodplain management ordinance requires the lowest floor of the building be elevated above the highest adjacent grade at least as high as the depth number on the FIRM. Buildings in Zone A (without BFE) may qualify for a lower insurance rate if an engineered BFE is developed at the site.

Item E2. For Building Diagrams 6-9 with permanent flood openings (see pages 8-9), enter the height to the nearest tenth of a foot (tenth of a meter in Puerto Rico) of the next higher floor or elevated floor (as indicated in the applicable diagram) above or below the highest adjacent grade (HAG).

Item E3. Enter the height to the nearest tenth of a foot (tenth of a meter in Puerto Rico), in relation to the highest adjacent grade next to the building, for the top of attached garage slab. (Because elevation for top of attached garage slab is self-explanatory, attached garages are not illustrated in the diagrams.) *If this item does not apply to the building, enter "N/A" for not applicable.*

Item E4. Enter the height to the nearest tenth of a foot (tenth of a meter in Puerto Rico), in relation to the highest adjacent grade next to the building, of the platform elevation that supports the machinery and/or equipment servicing the building. Indicate machinery/equipment type in the Comments area of Section F. *If this item does not apply to the building, enter "N/A" for not applicable.*

Item E5. For those communities where this base flood depth is not available, the community will need to determine whether the top of the bottom floor is elevated in accordance with the community's floodplain management ordinance.

SECTION F - PROPERTY OWNER (OR OWNER'S REPRESENTATIVE) CERTIFICATION

Complete as indicated. This section is provided for certification of measurements taken by a property owner or property owner's representative when responding to Sections A, B, and E. The address entered in this section must be the actual mailing address of the property owner or property owner's representative who provided the information on the certificate.

SECTION G - COMMUNITY INFORMATION (OPTIONAL)

Complete as indicated. The community official who is authorized by law or ordinance to administer the community's floodplain management ordinance can complete Sections A, B, C (or E), and G of this Elevation Certificate. Section C may be

filled in by the local official as provided in the instructions below for Item G1. If the authorized community official completes Sections C, E, or G, complete the appropriate item(s) and sign this section.

Check **Item G1** if Section C is completed with elevation data from other documentation, including elevations obtained from the Community Rating System Elevation Software, that has been signed and sealed by a licensed surveyor, engineer, or architect who is authorized by law to certify elevation information. Indicate the source of the elevation data and the date obtained in the Comments area of Section G. If you are both a community official and a licensed land surveyor, engineer, or architect authorized by law to certify elevation information, and you performed the actual survey for a building in Zones A1-A30, AE, AH, A (with BFE), VE, V1-V30, V (with BFE), AR, AR/A, AR/A1-A30, AR/AE, AR/AH, or AR/AO, you must also complete Section D.

Check **Item G2** if information is entered in Section E by the community for a building in Zone A (without a FEMA-issued or community-issued BFE) or Zone AO.

Check **Item G3** if the information in Items G4-G10 has been completed for community floodplain management purposes to document the as-built lowest floor elevation of the building. Section C of the Elevation Certificate records the elevation of various building components but does not determine the lowest floor of the building or whether the building, as constructed, complies with the community's floodplain management ordinance. This must be done by the community. Items G4-G10 provide a way to document these determinations.

Item G4. Permit Number. Enter the permit number or other identifier to key the Elevation Certificate to the permit issued for the building.

Item G5. Date Permit Issued. Enter the date the permit was issued for the building.

Item G6. Date Certificate of Compliance/Occupancy Issued. Enter the date that the Certificate of Compliance or Occupancy or similar written official documentation of as-built lowest floor elevation was issued by the community as evidence that all work authorized by the floodplain development permit has been completed in accordance with the community's floodplain management laws or ordinances.

Item G7. New Construction or Substantial Improvement. Check the applicable box. "Substantial Improvement" means any reconstruction, rehabilitation, addition, or other improvement of a building, the cost of which equals or exceeds 50 percent of the market value of the building before the start of construction of the improvement. The term includes buildings that have incurred substantial damage, regardless of the actual repair work performed.

Item G8. As-built lowest floor elevation. Enter the elevation of the lowest floor (including basement) when the construction of the building is completed and a final inspection has been made to confirm that the building is built in accordance with the permit, the approved plans, and the community's floodplain management laws or ordinances. Indicate the elevation datum used.

Item G9. BFE. Using the appropriate FIRM panel, FIS Profile, or other data source, locate the property and enter the BFE (or base flood depth) of the building site. Indicate the elevation datum used.

Item G10. Community's design flood elevation. Enter the elevation (including freeboard above the BFE) to which the community requires the lowest floor to be elevated. Indicate the elevation datum used.

Enter your name, title, and telephone number, and the name of the community. Sign and enter the date in the appropriate blanks.

BUILDING DIAGRAMS

The following diagrams illustrate various types of buildings. Compare the features of the building being certified with the features shown in the diagrams and select the diagram most applicable. Enter the diagram number in Item A7, the square footage of crawlspace or enclosure(s) and the area of flood openings in square inches in Items A8.a-c, the square footage of attached garage and the area of flood openings in square inches in Items A9.a-c, and the elevations in Items C2.a-h.

In A zones, the floor elevation is taken at the top finished surface of the floor indicated; in V zones, the floor elevation is taken at the bottom of the lowest horizontal structural member (see drawing in instructions for Section C).

DIAGRAM 1A

All slab-on-grade single- and multiple-floor buildings (other than split-level) and high-rise buildings, either detached or row type (e.g., townhouses); with or without attached garage.

Distinguishing Feature – The bottom floor is at or above ground level (grade) on at least one side.*

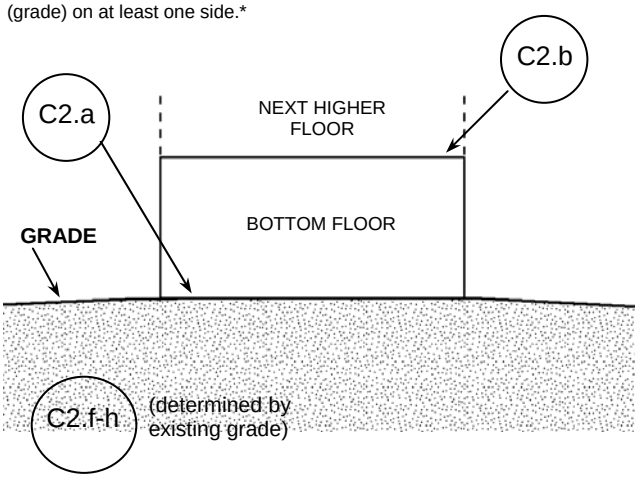

DIAGRAM 1B

All raised-slab-on-grade or slab-on-stem-wall-with-fill single- and multiple-floor buildings (other than split-level), either detached or row type (e.g., townhouses); with or without attached garage.

Distinguishing Feature – The bottom floor is at or above ground level (grade) on at least one side.*

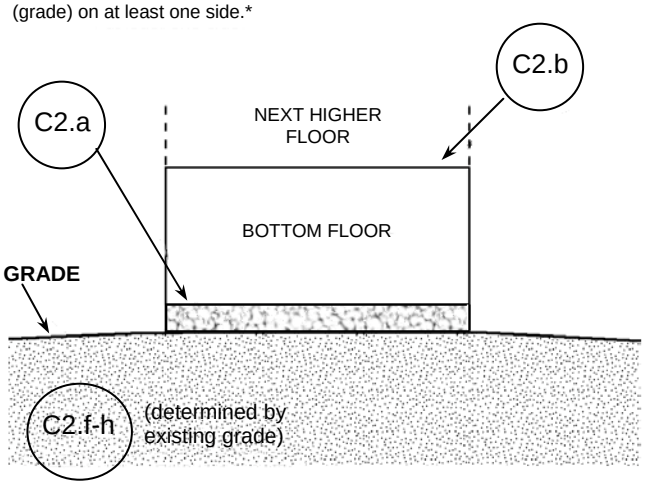

DIAGRAM 2

All single- and multiple-floor buildings with basement (other than split-level) and high-rise buildings with basement, either detached or row type (e.g., townhouses); with or without attached garage.

Distinguishing Feature – The bottom floor (basement or underground garage) is below ground level (grade) on all sides.*

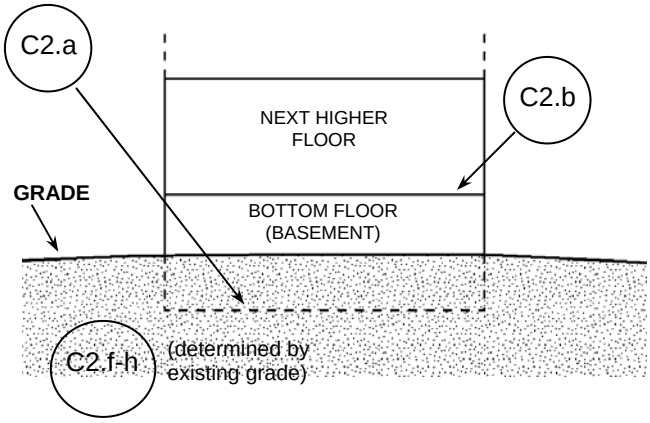

* A floor that is below ground level (grade) on all sides is considered a basement even if the floor is used for living purposes, or as an office, garage, workshop, etc

DIAGRAM 3

All split-level buildings that are slab-on-grade, either detached or row type (e.g., townhouses); with or without attached garage.

Distinguishing Feature – The bottom floor (excluding garage) is at or above ground level (grade) on at least one side.*

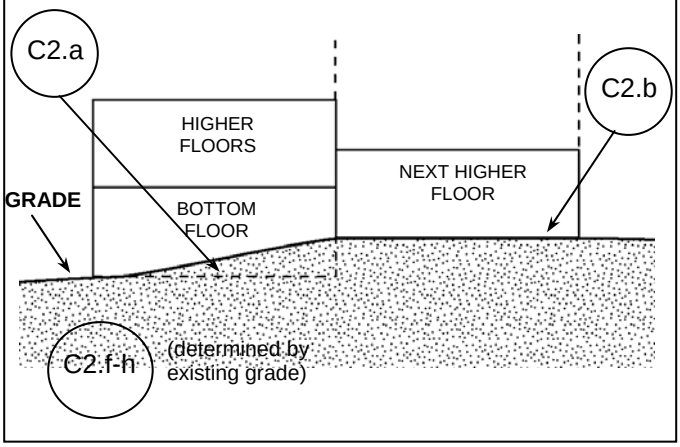

DIAGRAM 4

All split-level buildings (other than slab-on-grade), either detached or row type (e.g., townhouses); with or without attached garage.

Distinguishing Feature – The bottom floor (basement or underground garage) is below ground level (grade) on all sides.*

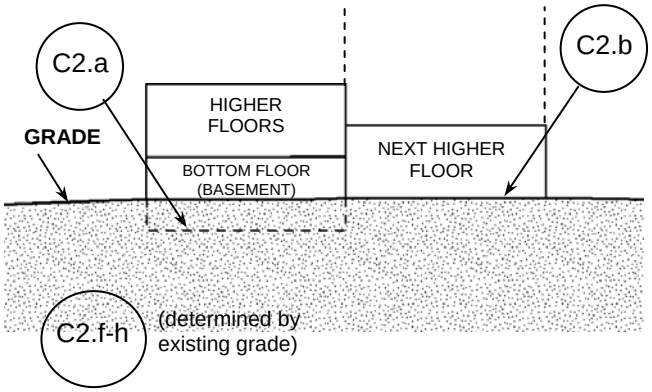

DIAGRAM 5

All buildings elevated on piers, posts, piles, columns, or parallel shear walls. No obstructions below the elevated floor.

Distinguishing Feature – For all zones, the area below the elevated floor is open, with no obstruction to flow of flood waters (open lattice work and/or insect screening is permissible).

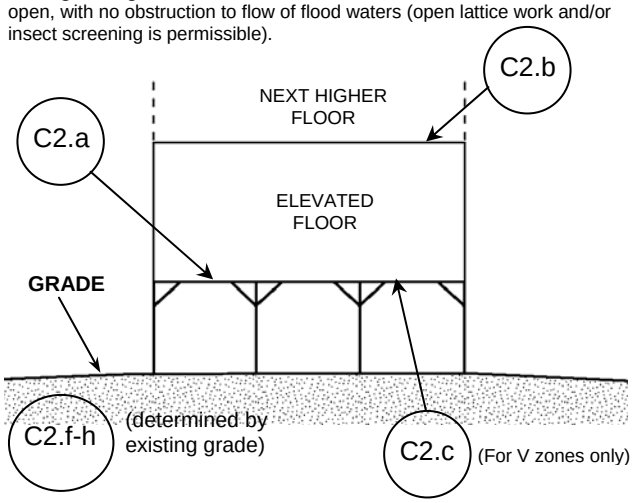

DIAGRAM 6

All buildings elevated on piers, posts, piles, columns, or parallel shear walls with full or partial enclosure below the elevated floor.

Distinguishing Feature – For all zones, the area below the elevated floor is enclosed, either partially or fully. In A Zones, the partially or fully enclosed area below the elevated floor is with or without openings** present in the walls of the enclosure. Indicate information about enclosure size and openings in Section A – Property Information.

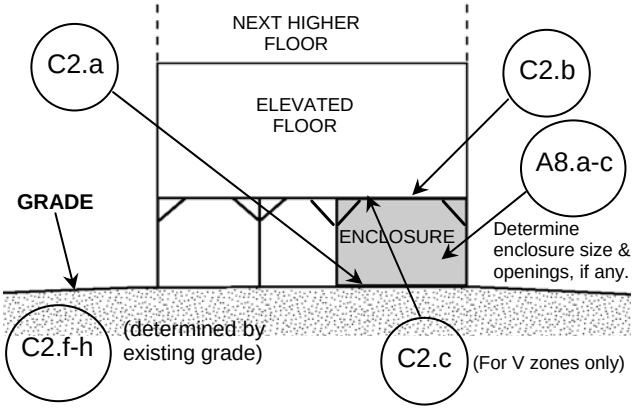

* A floor that is below ground level (grade) on all sides is considered a basement even if the floor is used for living purposes, or as an office, garage, workshop, etc.

** An "opening" is a permanent opening that allows for the free passage of water automatically in both directions without human intervention. Under the NFIP, a minimum of two openings is required for enclosures or crawlspaces. The openings shall provide a total net area of not less than one square inch for every square foot of area enclosed, excluding any bars, louvers, or other covers of the opening. Alternatively, an Individual Engineered Flood Openings Certification or an Evaluation Report issued by the International Code Council Evaluation Service (ICC ES) must be submitted to document that the design of the openings will allow for the automatic equalization of hydrostatic flood forces on exterior walls. A window, a door, or a garage door is not considered an opening; openings may be installed in doors. Openings shall be on at least two sides of the enclosed area. If a building has more than one enclosed area, each area must have openings to allow floodwater to directly enter. The bottom of the openings must be no higher than one foot above the higher of the exterior or interior grade or floor immediately below the opening. For more guidance on openings, see NFIP Technical Bulletin 1.

DIAGRAM 7

All buildings elevated on full-story foundation walls with a partially or fully enclosed area below the elevated floor. This includes walkout levels, where at least one side is at or above grade. The principal use of this building is located in the elevated floors of the building.

Distinguishing Feature – For all zones, the area below the elevated floor is enclosed, either partially or fully. In A Zones, the partially or fully enclosed area below the elevated floor is with or without openings* present in the walls of the enclosure. Indicate information about enclosure size and openings in Section A – Property Information.

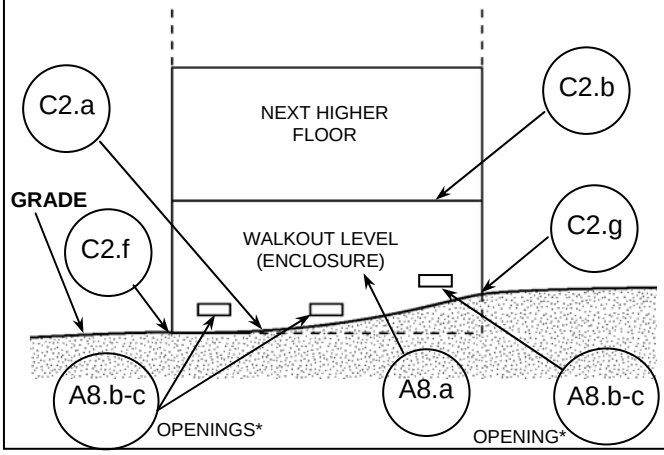

DIAGRAM 8

All buildings elevated on a crawlspace with the floor of the crawlspace at or above grade on at least one side, with or without an attached garage.

Distinguishing Feature – For all zones, the area below the first floor is enclosed by solid or partial perimeter walls. In all A zones, the crawlspace is with or without openings* present in the walls of the crawlspace. Indicate information about crawlspace size and openings in Section A – Property Information.

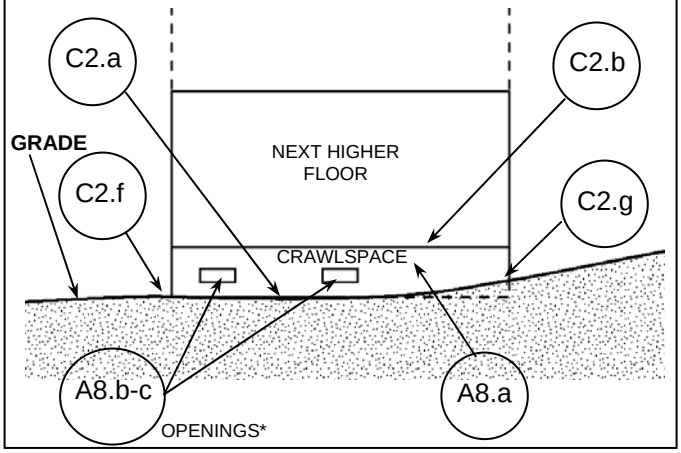

DIAGRAM 9

All buildings (other than split-level) elevated on a sub-grade crawlspace, with or without attached garage.

Distinguishing Feature – The bottom (crawlspace) floor is at or below ground level (grade) on all sides.** (If the distance from the crawlspace floor to the top of the next higher floor is more than 5 feet, or the crawlspace floor is more than 2 feet below the grade (LAG) on all sides, use Diagram 2.)

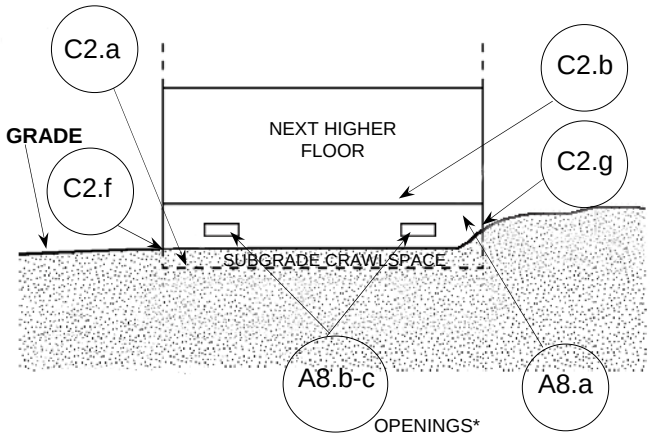

* An "opening" is a permanent opening that allows for the free passage of water automatically in both directions without human intervention. Under the NFIP, a minimum of two openings is required for enclosures or crawlspaces. The openings shall provide a total net area of not less than one square inch for every square foot of area enclosed, excluding any bars, louvers, or other covers of the opening. Alternatively, an Individual Engineered Flood Openings Certification or an Evaluation Report issued by the International Code Council Evaluation Service (ICC ES) must be submitted to document that the design of the openings will allow for the automatic equalization of hydrostatic flood forces on exterior walls. A window, a door, or a garage door is not considered an opening; openings may be installed in doors. Openings shall be on at least two sides of the enclosed area. If a building has more than one enclosed area, each area must have openings to allow floodwater to directly enter. The bottom of the openings must be no higher than one foot above the higher of the exterior or interior grade or floor immediately below the opening. For more guidance on openings, see NFIP Technical Bulletin 1.

** A floor that is below ground level (grade) on all sides is considered a basement even if the floor is used for living purposes, or as an office, garage, workshop, etc.

Notice of Intent (NOI) for General NPDES Permit for Stormwater Discharges from Construction Activities (TNR100000) Located within a Qualifying Local Program (QLP)

Purpose of this Form: The State of Tennessee General NPDES Permit for Stormwater Discharges from Construction Activities (TNCGP) allows for construction activities within the jurisdiction of a Qualifying Local Program (QLP) to only have to apply and obtain coverage for both the TNCGP and the local program from the QLP itself. By signing this Notice of Intent, the permittee agrees to be responsible for compliance under the requirements of the TNCGP. The permittee will not be required to submit an NOI, a SWPPP, a notice of termination, or a permit fee to the local TDEC Environmental Field Office. For additional information, please see Section 1.4.5 of the TNCGP or the state's QLP webpage at http://tn.gov/environment/wpc/stormh2o/qlp.shtml.

Site or Project Name:		**QLP Tracking Number:** **TNQ**
Street Address or Location:		Start date: Estimated end date:
Site Description:		Latitude (dd.dddd): Longitude (dd.dddd):
County(ies):	QLP/MS4 Jurisdiction:	Acres Disturbed: Total Acres:
Are there streams ☐ and/or wetlands ☐ on or adjacent to the construction site? If wetlands are located on-site and may be impacted, attach wetlands delineation report. ☐ Wetlands Delineation Report Attached If an Aquatic Resource Alteration Permit has been obtained for this site, what is the permit number? ARAP Permit No.:		
Receiving waters:		
Attach the SWPPP with the NOI ☐ SWPPP Attached	Attach a site location map ☐ Map Attached	

Name of Site Owner or Developer (Site-Wide Permittee): (person, company, or legal entity that has operational or design control over construction plans and specifications):			
Site Owner or Developer Contact name: (individual responsible for site)	Title or Position: (the party who signs the certification below)		
Mailing Address:	City:	State:	Zip:
Phone: ( )	Fax: ( )	E-mail:	

Optional Contact:	Title or Position:		
Address:	City:	State:	Zip:
Phone: ( )	Fax: ( )	E-mail:	

Owner/Developer Certification (must be signed by president, vice-president or equivalent, or ranking elected official)		
I certify under penalty of law that this document and all attachments were prepared by me, or under my direction or supervision. The submitted information is to the best of my knowledge and belief, true, accurate, and complete. I am aware that there are significant penalties for submitting false information, including the possibility of fine and imprisonment. As specified in Tennessee Code Annotated Section 39-16-702(a)(4), this declaration is made under penalty of perjury.		
Owner/Developer name; print or type	Signature	Date

Contractor(s) Certification (must be signed by president, vice-president or equivalent, or ranking elected official)		
I certify under penalty of law that I have reviewed this document, any attachments, and the SWPPP referenced above. Based on my inquiry of the construction site owner/developer identified above, and/or my inquiry of the person directly responsible for assembling this NOI, I believe the information submitted is accurate. I am aware that this NOI, if approved, makes the above-described construction activity subject to NPDES permit number TNR100000, and that certain of my activities on-site are thereby regulated. I certify under penalty of law that this document and all attachments were prepared by me, or under my direction or supervision. The submitted information is to the best of my knowledge and belief, true, accurate, and complete. I am aware that there are significant penalties for submitting false information, including the possibility of fine and imprisonment. As specified in Tennessee Code Annotated Section 39-16-702(a)(4), this declaration is made under penalty of perjury.		
Primary contractor name and address	Signature	Date
Other contractor name and address	Signature	Date
Other contractor name and address; print or type	Signature	Date

Notice of Intent (NOI) for General NPDES Permit for Stormwater Discharges from Construction Activities (TNR100000) Located within a Qualifying Local Program (QLP)

Is the project site within the vicinity of any Threatened or Endangered aquatic species? ☐ no ☐ yes, please attach a list of all species affected		
Threatened and Endangered Species Certification (must be Owner/Developer)		
I certify that my Stormwater Pollution Prevention Plan (SWPPP), stormwater discharges, and stormwater discharge-related activities are protective of legally protected listed and proposed threatened or endangered aquatic fauna or flora in the receiving stream(s); or discharges or activities that would not result in a "take" of a state or federal listed endangered or threatened aquatic or wildlife species deemed in need of management or special concerned species, or such species' habitat. I am aware that there are significant penalties for submitting false information, including the possibility of fine and imprisonment. As specified in Tennessee Code Annotated Section 39-16-702(a)(4), this declaration is made under penalty of perjury.		
Owner/Developer name; print or type	Signature	Date

Additional Instructions:

Who must submit the NOI form to the QLP? The NOI form must be signed by the "operator(s)" of the construction site. Operators will most likely include the developer of the site, and the primary contractor(s). "Operator" means any party associated with the construction project that meets either of the following two criteria: (1) the party has design or operational control over project specifications (including the ability to make modifications in specifications); or (2) the party has day-to-day operational control of those activities at a project site which are necessary to ensure compliance with the stormwater pollution prevention plan (SWPPP) or other permit conditions (e.g., they are authorized to direct workers at the site to carry out activities identified in the stormwater pollution prevention plan or comply with other permit conditions). If a contractor has not been identified at the time the NOI is submitted by the developer, the contractor(s) must sign an NOI for the project in order to obtain authorization under this permit. The contractor must include the NPDES permit number that is already assigned to the site, along with the name of the construction project and its location.

Notice of Coverage. The QLP will review the NOI for completeness and accuracy and prepare a notice of coverage (NOC). Stormwater discharge from the construction site is authorized as of the effective date of the NOC.

Complete the form. Type or print clearly, using ink and not markers or pencil. Answer each item or enter "NA," for not applicable, if a particular item does not fit the circumstances or characteristics of your construction site or activity. If you need additional space, attach a separate piece of paper to the NOI form. **The NOI will be considered incomplete without a map and the SWPPP.**

Describe and locate the project. Use the legal or official name of the construction site. If a construction site lacks street name or route number, give the most accurate geographic information available to describe the location (reference to adjacent highways, roads and structures; e.g. intersection of state highways 70 and 100). Latitude and longitude (expressed in decimal degrees) of the center of the site can be located on USGS quadrangle maps. The quadrangle maps can be obtained at the USGS World Wide Web site: http://www.usgs.gov/; latitude and longitude information can be found at numerous other web sites. Attach a copy of a portion of a 7.5 minute quad map, showing location of site, with boundaries at least one mile outside the site boundaries. Provide estimated starting date of clearing activities and completion date of the project, and an estimate of the number of acres of the site on which soil will be disturbed, including borrow areas, fill areas, stockpiles and the total acres. For linear projects, give location at each end of the construction area.

Give name of the receiving waters Trace the route of stormwater runoff from the construction site and determine the name of the river(s), stream(s), creek(s), wetland(s), lake(s) or any other water course(s) into which the stormwater runoff drains. Note that the receiving water course may or may not be located on the construction site. If the first water body receiving construction site runoff is unnamed ("unnamed tributary"), determine the name of the water body which the unnamed tributary enters.

ARAP permit may be required **If your work will disturb or cause alterations of a stream or wetland, you must obtain an appropriate Aquatic Resource Alteration Permit (ARAP).** If you have a question about the ARAP program or permits, contact your local Environmental Field Office (EFO).

Submitting the form and obtaining more information Note that this form must be signed by the company President, Vice-President, for details see permit subpart 2.5. For more information, contact QLP or your local EFO at the toll-free number 1-888-891-8332 (TDEC)

TENNESSEE DEPARTMENT OF ENVIRONMENT AND CONSERVATION (TDEC)
Division of Water Resources
6th Floor Annex, L&C Tower, 401 Church Street, Nashville, Tennessee 37243
1-888-891-TDEC (8332)

Notice of Termination (NOT) for General NPDES Permit
for Stormwater Discharges from Construction Activities (CGP)
Located within a Qualifying Local Program (QLP)

This form is required to be submitted to the local QLP when requesting termination of coverage from the CGP. The purpose of this form is to notify the QLP that either all stormwater discharges associated with construction activity from the portion of the identified facility where you, as an operator, have ceased or have been eliminated; or you are no longer an operator at the construction site. Submission of this form shall in no way relieve the permittee of permit obligations required prior to submission of this form. Please submit this form to the local QLP from which you received your coverage. For additional information, please contact the QLP or the state's QLP webpage at http://tn.gov/environment/wpc/stormh2o/qlp.shtml or contact your local EFO at the numbers identified below.

Type or print clearly, using ink and not markers or pencil.

Site or Project Name:	**QLP Tracking Number: TNQ**
Street Address or Location:	County(ies):

Name of Permittee Requesting Termination of Coverage:			
Permittee Contact Name:	Title or Position:		
Mailing Address:	City:	State:	Zip:
Phone:	E-mail:		

Check the reason(s) for termination of permit coverage:

☐	Stormwater discharge associated with construction activity is no longer occurring and the permitted area has a uniform 70% permanent vegetative cover OR has equivalent measures such as rip rap or geotextiles, in areas not covered with impervious surfaces.
☐	You are no longer the operator at the construction site (i.e., termination of site-wide, primary or secondary permittee coverage).

Certification and Signature: (must be signed by president, vice-president or equivalent ranking elected official)

I certify under penalty of law that either: (a) all stormwater discharges associated with construction activity from the portion of the identified facility where I was an operator have ceased or have been eliminated or (b) I am no longer an operator at the construction site. I understand that by submitting this notice of termination, I am no longer authorized to discharge stormwater associated with construction activity under this general permit, and that discharging pollutants in stormwater associated with construction activity to waters of the United States is unlawful under the Clean Water Act where the discharge is not authorized by a NPDES permit. I also understand that the submittal of this notice of termination does not release an operator from liability for any violations of this permit or the Clean Water Act.

I certify under penalty of law that this document and all attachments were prepared by me, or under my direction or supervision. The submitted information is to the best of my knowledge and belief, true, accurate, and complete. I am aware that there are significant penalties for submitting false information, including the possibility of fine and imprisonment. As specified in Tennessee Code Annotated Section 39-16-702(a)(4), this declaration is made under penalty of perjury.

For the purposes of this certification, elimination of stormwater discharges associated with construction activity means that all disturbed soils at the portion of the construction site where the operator had control have been finally stabilized, the temporary erosion and sediment control measures have been removed, and/or the site or portions of the site have obtained permit coverage by subsequent operators or that all stormwater discharges associated with construction activities from the identified site that are authorized by a NPDES general permit have otherwise been eliminated from the portion of the construction site where the operator had control.

Permittee name (print or type):	Signature:	Date:

QLP NOI/SWPPP Checklist - Version 1.3

Date Received: _____ QLP Tracking Number: TNQ_____

QLP: _____ Reviewer: _____

Project Name: _____

*Impaired receiving waters: _____ Yes _____ No **Exceptional Tennessee Waters: _____ Yes _____ No Why?: _____

YES	NO	Comments	Notice of Intent
			Correct site-wide permittee (Owner/Developer) entity name included
			Proper signature for the owner/developer provided
			Receiving waters listed: _____ ARAP Required: Yes _____ No _____ ARAP No. _____
			***Indicators of possible unidentified streams or wetlands. If yes, does a stream determination need to be performed?
			2.6.2- USGS topo map provided showing the boundaries of the construction site
			Start/End Dates listed
			Disturbed acreage given
			Latitude/Longitude given and is correct

YES	NO	N/A	Comments	SWPPP
				3.1.1 - Plans and specs for structural control measures prepared and stamped by professional engineer or landscape architect
				3.1.2 - Quality Assurance Site Assessment described
				3.3.1 - The SWPPP is signed by the operator(s) in accordance with subpart 7.7
				3.3.3 - Location of on-site SWPPP identified
				3.5.1.a - A description of all construction activities at the site (not just grading and street construction) has been included
				3.5.1.b - The sequence of major activities which disturb soils for major portions of the site (excavation, grading and infrastructure installation, etc.) is explained
				3.5.1.c - Estimates of the total area of the site and the total area that is expected to be disturbed by grading, filling, or other construction activities is given
				3.5.1.d - Estimation of the percent slope based off of a drainage area serving each outfall
				3.5.1.g - Identification on the site plan of outfall points
				3.5.1.i - A description of any proposed stream alterations and associated ARAP number has been given
				3.5.1.j - The approximate size and location of affected wetland acreage at the site is noted (if applicable)
				3.5.1.m - For projects of more than 50 acres, the construction phases must be described
				3.5.1.n - Limits of disturbance shall be clearly marked in the SWPPP
				3.5.2 - EPSC plans have been included with the SWPPP: <5 acres = 2 phases of EPSC sheets.; ≥5 acres - 3 phases of EPSC sheets
				3.5.3.1.e - Discusses when sediment will be removed from sediment controls (as necessary but at least when design capacity has been reduced by 50%)
				3.5.3.1.n - Construction access described to reduce off-site vehicle tracking of sediment
				3.5.3.2 - Stabilization completed within 15 days (7 days for ≥35% slopes) on portions of site where construction activities have temporarily or permanently ceased
				3.5.3.3 - The SWPPP contains a description/list of structural practices
				3.5.3.3 - Acreage of drainage areas and basin volumes have been provided
				3.5.3.3 - EPSCs have been designed to control the rainfall and runoff from a 2 year, 24 hour storm
				3.5.3.3 - For an outfall in a drainage area of a total of 10 or more acres, a temporary sediment basin has been provided
				3.5.4 - At discharge locations and along the length of any outfall channel velocity dissipation devices identified to control pollution
				3.5.8.2 - Identifies that inspections of outfall points and all EPSCs shall be performed at least twice a week and at least 72 hours apart
				4.1.2-A 30-foot buffer zone has been provided and shown on plans along all streams, lakes, and wetlands on or adjacent to the construction site

YES	NO	N/A	Comments	Discharges into Impaired or Exceptional Waters
				5.4.1.a - The SWPPP must certify that EPSCs used at the site are designed to control storm runoff generated by a 5-year, 24-hour storm event
				5.4.1.f - For an outfall in a drainage area of a total of 5 or more acres, a temporary sediment basin has been provided
				5.4.2 - A 60-foot buffer zone has been provided and shown on plans along all streams, lakes, and wetlands on or adjacent to the construction site

*Current Impaired Waters: http://tnmap.tn.gov/wpc/default.aspx?resetSession=true **Current Exceptional Waters: http://environment-online.state.tn.us:8080/pls/enf_reports/f?p=9034:34304:438790041100476

***Identify indicators of possible streams or wetlands utilizing site information and resources such as: 1) Contour and stream indicators on USGS TOPO maps, 2) Drainage to a defined conveyance (20 acres east TN/40 middle TN/ 75 west TN), 3) Arial photography identifying a sinuous tree line or grouping of remaining forest in an agricultural setting, 4) Springhouse/box, 5) Comparable nearby drainage that has previously been determined to have a stream, 6) Onsite or adjacent ponds or impoundments, 7) Check EFO HD GIS for previous determinations, 8) NRCS soil maps or Web Soil Survey (http://websoilsurvey.nrcs.usda.gov/app/WebSoilSurvey.aspx), 9) Wetlands on National Wetlands Inventory: (http://107.20.228.18/Wetlands/WetlandsMapper.html#)

If sufficient indicators exist, a stream determination may need to be performed. Stream determinations must be performed by a QHP.

Comments

TENNESSEE DEPARTMENT OF ENVIRONMENT AND CONSERVATION (TDEC)
Division of Water Resources
6th Floor Annex, L&C Tower, 401 Church Street, Nashville, Tennessee 37243
1-888-891-8332 (TDEC)
General NPDES Permit for Stormwater Discharges from Construction Activities (CGP)

Construction Stormwater Inspection Certification (Twice-Weekly Inspections)

Site or Project Name:			**NPDES Tracking Number: TNR**	
Primary Permittee Name:			Date of Inspection:	
Current approximate disturbed acreage:		Has rainfall been checked/documented daily? ☐Yes ☐ No	Name of Inspector:	
Current weather conditions:			Inspector's TNEPSC Certification Number:	

Please check the box if the following items are on-site:

☐ Notice of Coverage (NOC) ☐ Stormwater Pollution Prevention Plan (SWPPP) ☐ Twice-weekly inspection documentation

☐ Site contact information ☐ Rain Gage ☐ Off-site Reference Rain Gage Location: _____

Best Management Practices (BMPs):

Are the Erosion Prevention and Sediment Controls (EPSCs) functioning correctly: If "No," describe below in Comment Section			
1.	Are all applicable EPSCs installed and maintained per the SWPPP?	☐Yes	☐No
2.	Are EPSCs functioning correctly at all disturbed areas/material storage areas per section 4.1.5?	☐Yes	☐No
3.	Are EPSCs functioning correctly at outfall/discharge points such that there is no objectionable color contrast in the receiving stream, and no other water quality impacts per section 5.3.2?	☐Yes	☐No
4.	Are EPSCs functioning correctly at ingress/egress points such that there is no evidence of track out?	☐Yes	☐No
5.	If applicable, have discharges from dewatering activities been managed by appropriate controls per section 4.1.4? If "No," describe below the measures to be implemented to address deficiencies.	☐Yes	☐No
6.	If construction activity at any location on-site has temporarily/permanently ceased, was the area stabilized within 14 days per section 3.5.3.2? If "No," describe below each location and measures taken to stabilize the area(s).	☐Yes	☐No
7.	Have pollution prevention measures been installed, implemented, and maintained to minimize the discharge of pollutants from equipment and vehicle washing, wheel wash water, and other wash waters per section 4.1.5? If "No," describe below the measures to be implemented to address deficiencies.	☐Yes	☐No
8.	If a concrete washout facility is located on site, is it clearly identified on the project and maintained? If "No," describe below the measures to be implemented to address deficiencies. ☐ N/A	☐Yes	☐No
9.	Have all previous deficiencies been addressed? If "No," describe the remaining deficiencies in the Comments section. ☐ Check if deficiencies/corrective measures have been reported on a previous form.	☐Yes	☐No

Comment Section. If the answer is "No" for any of the above, please describe the problem and corrective actions to be taken. Otherwise, describe any pertinent observations:

Certification and Signature (must be signed by the certified inspector and the permittee per Sections 3.5.8.2 (g) and 7.7.2 of the CGP)

I certify under penalty of law that this document and all attachments were prepared by me, or under my direction or supervision. The submitted information is to the best of my knowledge and belief, true, accurate, and complete. I am aware that there are significant penalties for submitting false information, including the possibility of fine and imprisonment. As specified in Tennessee Code Annotated Section 39-16-702(a)(4), this declaration is made under penalty of perjury.

Inspector Name and Title:	Signature:	Date:
Primary Permittee Name and Title:	Signature:	Date:

Construction Stormwater Inspection Certification Form (Twice-Weekly Inspections)

Purpose of this form/ Instructions

An inspection, as described in section 3.5.8.2. of the General Permit for Stormwater Discharges from Construction Activities ("Permit"), shall be performed at least twice every calendar week and documented on this form. Inspections shall be performed at least 72 hours apart. Where sites or portion(s) of construction sites have been temporarily stabilized, or runoff is unlikely due to winter conditions (e.g., site covered with snow or ice), such inspection only has to be conducted once per month until thawing results in runoff or construction activity resumes.

Inspectors performing the required twice weekly inspections must have an active certification by completing the "Fundamentals of Erosion Prevention and Sediment Control Level I" course. (http://www.tnepsc.org/). A copy of the certification or training record for inspector certification should be kept on site.

Qualified personnel, as defined in section 3.5.8.1 of the Permit (provided by the permittee or cooperatively by multiple permittees) shall inspect disturbed areas of the construction site that have not been finally stabilized, areas used for storage of materials that are exposed to precipitation, structural control measures, locations where vehicles enter or exit the site, and each outfall.

Disturbed areas and areas used for storage of materials that are exposed to precipitation shall be inspected for evidence of, or the potential for, pollutants entering the site's drainage system. Erosion prevention and sediment control measures shall be observed to ensure that they are operating correctly.

Outfall points (where discharges leave the site and/or enter waters of the state) shall be inspected to determine whether erosion prevention and sediment control measures are effective in preventing significant impacts to receiving waters. Where discharge locations are inaccessible, nearby downstream locations shall be inspected. Locations where vehicles enter or exit the site shall be inspected for evidence of offsite sediment tracking.

Based on the results of the inspection, any inadequate control measures or control measures in disrepair shall be replaced or modified, or repaired as necessary, before the next rain event if possible, but in no case more than 7 days after the need is identified.

Based on the results of the inspection, the site description identified in the SWPPP in accordance with section 3.5.1 of the Permit and pollution prevention measures identified in the SWPPP in accordance with section 3.5.2 of the Permit, shall be revised as appropriate, but in no case later than 7 days following the inspection. Such modifications shall provide for timely implementation of any changes to the SWPPP, but in no case later than 14 days following the inspection.

All inspections shall be documented on this Construction Stormwater Inspection Certification form. Alternative inspection forms may be used as long as the form contents and the inspection certification language are, at a minimum, equivalent to the division's form and the permittee has obtained a written approval from the division to use the alternative form. Inspection documentation will be maintained on site and made available to the division upon request. Inspection reports must be submitted to the division within 10 days of the request.

Trained certified inspectors shall complete inspection documentation to the best of their ability. Falsifying inspection records or other documentation or failure to complete inspection documentation shall result in a violation of this permit and any other applicable acts or rules.

Appendix B

Selected City Ordinances for Land Development

Please click the ordinance of your choosing to open the ordinance at *municode.com*

Chapter 12 - **Flood Damage Prevention and Control**
[PDF] *[Online at municode.com]*

Chapter 14 - **Horticulture** (also known as the Tree Protection Ordinance)
[PDF] *[Online at municode.com]*

Chapter 22.5 - **Stormwater** (also known as the Stormwater and Street Ordinance)
[PDF] *[Online at municode.com]*

Chapter 23 - **Streets and Sidewalks**
[PDF] *[Online at municode.com]*

Contact the Stormwater Engineering Section if there is reason to believe that one of these four ordinances has been changed or is not otherwise current.

The municipal charter and codes are also maintained online by Municode which can be accessed through the pulldown menus on most city webpages. Select "City Ordinances & Charter" from the pulldown menu. The Municode posting is updated at a pace that is generally a few months or more behind the current actions of

Chapter 12

FLOOD DAMAGE PREVENTION AND CONTROL

ARTICLE I. Findings of Fact, Purpose and Objectives

Section 12-1.	Findings of fact.
Section 12-2.	Statement of purpose.
Section 12-3.	Objectives.
Section 12-3.1.	Definitions.
Section 12-4.	Application.
Section 12-5.	Basis for establishing the areas of special flood hazard.
Section 12-6.	Requirement for development permit.
Section 12-7.	Compliance.
Section 12-8.	Abrogation and greater restrictions.
Section 12-9.	Interpretation.
Section 12-10.	Warning and disclaimer of liability.
Section 12-11.	Penalties for violation.
Sections 12-12-30.	Reserved.

ARTICLE II. Administration

Section 12-31.	Designation of the engineering department.
Section 12-32.	Permit procedures.
Section 12-33.	Duties and responsibilities of the engineering department.
Section 12-34.	Variance procedure.
Sections 12-35-50.	Reserved.

ARTICLE III. Provisions for Flood Hazard Reduction

Section 12-51.	General standards.
Section 12-52.	Specific standards.
Section 12-53.	Standards for areas of special flood hazard zones A1-30 and AE with established base flood elevation but without floodways designated.
Section 12-54.	Standards for areas of shallow flooding (AO and AH zones).
Section 12-55.	Standards for areas protected by flood protection system (A99 zones).
Section 12-56.	Standards for areas with special flood hazard with established base flood elevation and with floodways designated.
Section 12-57.	Standards for subdivision proposals.

Flood protection and control was initially established in Chapter 17A of the 1962 City Code. Participation in the National Flood Insurance Program and building/structure requirements was confirmed in June 1978 (Ordinance O-83-78). The first flood hazard boundary maps for Knoxville were issued February 18, 1981. The flood damage prevention and control ordinance was revised substantially in November 1990 (Ordinance O-347-90), December 2003 (Ordinance O-428-03) and April 2007 (Ordinance O-70-07). This version now dates as June 2013 (Ordinance O-112-2013).

ARTICLE I. FINDINGS OF FACT, PURPOSE AND OBJECTIVES

Section 12-1. Findings of fact.

(a) The city mayor and council wish to maintain eligibility in the National Flood Insurance Program and in order to do so must meet the requirements of 60.3(d) of the Federal Insurance Administration Regulations found at 44 CFR Ch. 1 (10-1-04 Edition) and subsequent amendments.

(b) Areas of the city are subject to periodic inundation which could result in loss of life and property, health and safety hazards, disruption of commerce and governmental services, extraordinary public expenditures for flood protection and relief, and impairment of the tax base, all of which adversely affect the public health, safety and general welfare.

(c) These flood losses are caused by the cumulative effect of obstructions in floodplains, causing increases in flood heights and velocities; and by uses in flood hazard areas which are vulnerable to floods; or construction which is inadequately elevated, floodproofed, or otherwise unprotected from flood damages.

(Ord. No. O-112-2013, § 1, 6-25-13)

Section 12-2. Statement of purpose.

It is the purpose of this chapter to promote the public health, safety and general welfare, and to minimize public and private losses due to flood conditions in specific areas. This chapter is designed to:

(1) Restrict or prohibit uses which are vulnerable to flooding or erosion hazards, or which result in damaging increases in erosion, flood heights or velocities;

(2) Require that uses vulnerable to floods, including community facilities, be protected against flood damage at the time of initial construction;

(3) Control the alteration of natural floodplains, stream channels, and natural protective barriers which are involved in the accommodation of floodwaters;

(4) Control filling, grading, dredging and other development which may increase flood damage or erosion; and

(5) Prevent or regulate the construction of flood barriers which will unnaturally divert floodwaters or which may increase flood hazards to other lands.

(Ord. No. O-112-2013, § 1, 6-25-13)

Section 12-3. Objectives.

The objectives of this chapter are:

(1) To protect human life, health and property;

(2) To minimize expenditure of public funds for costly flood control projects;

(3) To minimize the need for rescue and relief efforts associated with flooding and generally undertaken at the expense of the general public;

(4) To minimize prolonged business interruptions;

(5) To minimize damage to public facilities and utilities such as water and gas mains, electric, telephone and sewer lines, streets and bridges located in flood-prone areas;

(6) To help maintain a stable tax base by providing for the sound use and development of flood-prone areas in such a manner as to minimize blight in flood areas;

(7) To ensure that potential buyers are notified that property is in a flood-prone area; and

(8) To maintain eligibility for participation in the National Flood Insurance Program.

(Ord. No. O-112-2013, § 1, 6-25-13)

Section 12-3.1. Definitions.

Unless specifically defined below, words or phrases used in this chapter shall be interpreted as to give them the meaning they have in common usage and to give this chapter its most reasonable application given its stated purpose and objectives.

Accessory structure shall represent a subordinate structure to the principal structure on the same lot and, for the purpose of this section, shall conform to the following:

(1) Accessory structures shall only be used for parking of vehicles and/or storage.

(2) Accessory structures shall be designed to have low flood damage potential.

(3) Accessory structures shall be constructed and placed on the building site so as to offer the minimum resistance to the flow of floodwaters.

(4) Accessory structures shall be firmly anchored to prevent flotation, collapse and lateral movement which otherwise may result in damage to other structures.

(5) Utilities and service facilities such as electrical and heating equipment shall be elevated or otherwise protected from intrusion of flood waters.

Act means the statutes authorizing the National Flood Insurance Program that are incorporated in 42 U.S.C. 4001-4128.

Addition (to an existing building) means any walled and roofed expansion to the perimeter or height of a building in which the addition is connected by a common load-bearing wall other than a fire wall. Any walled and roofed addition which is connected by a fire wall or is separated by independent perimeter load-bearing walls shall be considered "new construction."

Appeal means a request for a review of the building official's interpretation of any provision of this chapter or a request for a variance.

Area of shallow flooding means a designated AO or AH zone on a community's flood insurance rate map (FIRM) with one (1) percent or greater annual chance of flooding to an average depth of one (1) to three (3) feet where a clearly defined channel does not exist, where the path of flooding is unpredictable and indeterminate, and where velocity flow may be evident. (Such flooding is characterized by ponding or sheet flow).

Area of special flood-related erosion hazard is the land within a community which is most likely to be subject to severe flood-related erosion losses. The area may be designated as zone E on the flood hazard boundary map (FHBM). After the detailed evaluation of the special flood-related erosion hazard area in preparation for publication of the FIRM, zone E may be further refined.

Area of special flood hazard is the land in the floodplain within a community subject to a one percent or greater chance of flooding in any given year. The area may be designated as zone A on the FHBM. After detailed ratemaking has been completed in preparation for publication of the FIRM, zone A usually is refined into zones A, AO, AH, A1-30, AE or A99.

Base flood means the flood having a two-tenths of one percent chance of being equaled or exceeded in any given year.

Basement means any portion of a building having its floor subgrade (below ground level) on all sides.

Building means any structure built for support, shelter, or enclosure for any occupancy or storage (see "structure").

Development means any man-made change to improved or unimproved real estate, including, but not limited to, buildings or other structures, mining, dredging, filling, grading, paving, excavation, drilling operations, or storage of equipment or materials.

Elevated building means a non-basement building built to have the lowest floor of the lowest enclosed area elevated above the ground level by means of fill, solid foundation perimeter walls

with openings sufficient to facilitate the unimpeded movement of floodwater, pilings, columns piers, or shear walls adequately anchored so as not to impair the structural integrity of the building during a base flood event.

Emergency flood insurance program or *emergency program* means the program as implemented on an emergency basis in accordance with section 1336 of the Act. It is intended as a program to provide a first layer amount of insurance on all insurable structures before the effective date of the initial FIRM.

Erosion means the process of the gradual wearing away of land masses. This peril is not per se covered under the program.

Exception means a waiver from the provisions of this chapter which relieves the applicant from the requirements of a rule, regulation, order or other determination made or issued pursuant to this chapter.

Existing construction means any structure for which the "start of construction" commenced before the effective date of the first floodplain management code or ordinance adopted by the community as a basis for that community's participation in the National Flood Insurance Program (NFIP).

Existing manufactured home park or subdivision means a manufactured home park or subdivision for which the construction of facilities for servicing the lots on which the manufactured homes are to be affixed (including, at a minimum, the installation of utilities, the construction of streets, final site grading or the pouring of concrete pads) is completed before the effective date of the first floodplain management code or ordinance adopted by the community as a basis for that community's participation in the National Flood Insurance Program (NFIP).

Existing structures. See "existing construction."

Expansion to an existing manufactured home park or subdivision means the preparation of additional sites by the construction of facilities for servicing the lots on which the manufactured homes are to be affixed (including the installation of utilities, the construction of streets, and either final site grading or the pouring of concrete pads).

500-year flood. See "base flood."

Flood or *flooding* means a general and temporary condition of partial or complete inundation of normally dry land areas from:

(1) The overflow of inland or tidal waters.

(2) The unusual and rapid accumulation or runoff of surface waters from any source.

Flood elevation determination means a determination by the Federal Emergency Management Agency of the water surface elevations of the base flood, that is the flood level that has a two-tenths of one percent or greater chance of occurrence in any given year.

Flood elevation study means an examination, evaluation, and determination of flood hazards and, if appropriate, corresponding water surface elevations, or an examination, evaluation and determination of mudslide (i.e., mudflow) and/or flood-related erosion hazards.

Flood hazard boundary map (FHBM) means an official map of a community, issued by the Federal Emergency Management Agency, where the boundaries of areas having special flood hazard have been designated as Zone A.

Flood insurance rate map (FIRM) means an official map of a community, issued by the Federal Emergency Management Agency, delineating the areas of special flood hazard or the risk premium zones applicable to the community.

Flood insurance study is the official report provided by the Federal Emergency Management Agency, evaluating flood hazards and containing flood profiles and water surface elevation of the base flood.

Floodplain or *flood-prone area* means any land area susceptible to being inundated by water from any source (see definition of "flooding").

Floodplain management means the operation of an overall program of corrective and preventive measures for reducing flood damage, including but not limited to emergency preparedness plans, flood control works and floodplain management regulations.

Flood protection system means those physical structural works for which funds have been authorized, appropriated and expended and which have been constructed specifically to modify flooding in order to reduce the extent of the area within a community subject to a "special flood hazard" and the extent of the depths of associated flooding. Such a system typically includes hurricane tidal barriers, dams, reservoirs, levees or dikes. These specialized flood modifying works are those constructed in conformance with sound engineering standards.

Floodproofing means any combination of structural and nonstructural additions, changes, or adjustments to structures which reduce or eliminate flood damage to real estate or improved real property, water and sanitary facilities, structures and their contents.

Flood-related erosion means the collapse or subsidence of land along the shore of a lake or other body of water as a result of undermining caused by waves or currents of water exceeding anticipated cyclical levels or suddenly caused by an unusually high water level in a natural body of water, accompanied by a severe storm, or by an unanticipated force of nature, such as a flash flood, or by some similarly unusual and unforeseeable event which results in flooding.

Flood-related erosion area or *flood-related erosion-prone area* means a land area adjoining the shore of a lake or other body of water, which due to the composition of the shoreline or bank and high water levels or wind-driven currents, is likely to suffer flood-related erosion damage.

Flood-related erosion area management means the operation of an overall program of corrective and preventive measures for reducing flood-related erosion damage, including but not limited to, emergency preparedness plans, flood-related erosion control works and floodplain management regulations.

Floodway means the channel of a river or other watercourse and the adjacent land areas that must be reserved in order to discharge the one hundred-year flood without cumulatively increasing the water surface elevation more than the designated height.

Floor means the top surface of an enclosed area in a building (including basement), i.e., top of slab in concrete slab construction or top of wood flooring in wood frame construction. The term does not include the floor of a garage used solely for parking vehicles.

Freeboard means a factor of safety usually expressed in feet above a flood level for purposes of floodplain management. "Freeboard" tends to compensate for the many unknown factors that could contribute to flood heights greater than the height calculated for a selected size flood and floodway conditions, such as wave action, blockage of bridge or culvert openings and the hydrological effect of urbanization of the watershed.

Functionally dependent use means a use which cannot perform its intended purpose unless it is located or carried out in close proximity to water. The term includes only docking facilities, port facilities that are necessary for the loading and unloading of cargo or passengers, and ship building and ship repair facilities, but does not include long-term storage or related manufacturing facilities.

Highest adjacent grade means the highest natural elevation of the ground surface, prior to construction, next to the proposed walls of a structure.

Historic structure means any structure that is:

(1) Listed individually in the National Register of Historic Places (a listing maintained by the U.S. Department of the Interior) or preliminarily determined by the Secretary of the Interior as meeting the requirements for individual listing on the National Register;

(2) Certified or preliminarily determined by the Secretary of the Interior as contributing to the historical significance of a registered historic district or a district preliminarily determined by the Secretary to qualify as a registered historic district;

(3) Individually listed on a state inventory of historic places; or

(4) Individually listed on a local inventory of historic places or within an existing H1 zone.

Levee means a man-made structure, usually an earthen embankment, designed and constructed in accordance with sound engineering practices to contain, control, or divert the flow of water so as to provide protection from temporary flooding.

Levee system means a flood protection system which consists of a levee or levees, and associated structures such as closure and drainage devices, which are constructed and operated in accordance with sound engineering practices.

Lowest floor means the lowest floor of the lowest enclosed area (including basement). An unfinished or flood-resistant enclosure, usable solely for parking of vehicles, building access or storage in an area other than a basement area is not considered a building's lowest floor; provided that such enclosure is not built so as to render the structure in violation of the applicable non-elevation design requirements of this chapter.

Manufactured home means a structure, transportable in one or more sections, which is built on a permanent chassis and designed for use with or without a permanent foundation when attached to the required utilities. The term "manufactured home" does not include a "recreational vehicle."

Manufactured home park or subdivision means a parcel (or contiguous parcels) of land divided into two or more manufactured home lots for rent or sale.

Map means the flood hazard boundary map (FHBM) or the flood insurance rate map (FIRM) for a community issued by the Federal Emergency Management Agency

Mean sea level means the average height of the sea for all stages of the tide. It is used as a reference for establishing various elevations within the floodplain. For purposes of this chapter, the term is synonymous with National Geodetic Vertical Datum (NGVD) of 1929, the North American Vertical Datum (NAVD) of 1988, or other datum, to which base flood elevations shown on a community's flood insurance rate map are referenced.

National Geodetic Vertical Datum (NGVD) as corrected in 1929 is a vertical control used as a reference for establishing varying elevations within the floodplain.

New construction means any structure for which the "start of construction" commenced on or after the effective date of the first floodplain management ordinance and includes any subsequent improvements to such structure.

New manufactured home park or subdivision means a manufactured home park or subdivision for which the construction of facilities for servicing the lots on which the manufactured homes are to be affixed (including at a minimum, the installation of utilities, the construction of streets, and either final site grading or the pouring of concrete pads) is completed on or after the effective date of the first floodplain management ordinance and includes any subsequent improvements to such structure.

North American Vertical Datum (NAVD) as corrected in the 1988, is a vertical control used as a reference for establishing varying elevations within a floodplain.

Person includes any individual or group of individuals, corporation, partnership, association, or any other entity, including state and local governments and agencies.

Reasonably safe from flooding means base flood waters will not inundate the land or damage structures to be removed from the Special Flood Hazard Area and that any subsurface waters related to the base flood will not damage existing or proposed structures.

Recreational vehicle means a vehicle which is:

(1) Built on a single chassis;

(2) Four hundred (400) square feet or less when measured at the largest horizontal projection;

(3) Designed to be self-propelled or permanently towable by a light duty truck; and

(4) Designed primarily not for use as a permanent dwelling but as temporary living quarters for recreational, camping, travel, or seasonal use.

Regulatory floodway means the channel of a river or other watercourse and the adjacent land areas that must be reserved in order to discharge the one hundred-year flood without cumulatively increasing the water surface elevation more than a designated height.

Riverine means relating to, formed by, or resembling a river (including tributaries), stream, brook, etc.

Special hazard area means an area having special flood, mudslide (i.e., mudflow) and/or flood-related erosion hazards and shown on an FHBM or FIRM as zone A, AO, A1-30, AE, A99 or AH.

Start of construction includes substantial improvement, and means the date the building permit was issued, provided the actual start of construction, repair, reconstruction, rehabilitation, addition, placement or other improvement was within one hundred eighty (180) days of the permit date. The actual start means either the first placement of permanent construction of a structure (including a manufactured home) on a site, such as the pouring of slabs or footings, the installation of piles, the construction of columns or any work beyond the stage of excavation; or the placement of a manufactured home on a foundation. Permanent construction does not include land preparation, such as clearing, grading and filling; nor does it include the installation of streets and/or walkways; nor does it include excavation for a basement, footings, piers or foundations or the erection of temporary forms, nor does it include the installation on the property of accessory buildings, such as garages or sheds not occupied as dwelling units or not part of the main structure. For a substantial improvement, the actual start of construction means the first alteration of any wall, ceiling, floor, or other structural part of a building, whether or not that alteration affects the external dimensions of the building.

State coordinating agency means the Tennessee Department of Economic and Community Development, Local Planning Assistance Office as designated by the governor of the state at the request of FEMA, to assist in the implementation of the National Flood Insurance Program for the state.

Structure for purposes of this chapter, means a walled and roofed building that is principally above ground, a manufactured home, a gas or liquid storage tank, or other man-made facilities or infrastructures.

Substantial damage means damage of any origin sustained by a structure whereby the cost of restoring the structure to its before-damaged condition would equal or exceed fifty (50) percent of the market value of the structure before the damage occurred.

Substantial improvement means any repairs, reconstruction, rehabilitation, addition, alteration or other improvement to a structure in which the cumulative cost of which equals or exceeds fifty (50) percent of the market value of the structure before the "start of construction" of the initial improvement. The market value of the structure is determined by:

(1) The appraised value of the structure prior to the start of the initial repair or improvement, or

(2) In the case of damage, the value of the structure prior to the damage occurring.

This term includes structures which have incurred substantial damage, regardless of the actual repair work performed.

The term does not, however, include either:

(1) Any project for improvement of a structure to correct existing violations of state or local health, sanitary, or safety code specifications which have been identified by the local code enforcement official and which are the minimum necessary to assure safe living conditions and not solely triggered by an improvement or repair project; or

(2) Any alteration of a historic structure, provided that the alteration will not preclude the structure's continued designation as a historic structure.

Substantially improved existing manufactured home parks or subdivision is where the repair, reconstruction, rehabilitation or improvement of the streets, utilities and pads equals or exceeds fifty (50) percent of the value of the streets, utilities and pads before the repair, reconstruction or improvement commenced.

Variance is a grant of relief from the requirements of this chapter which permits construction in a manner otherwise prohibited by this chapter where specific enforcement would result in unnecessary hardship.

Violation means the failure of a structure or other development to be fully compliant with the community's floodplain management regulations. A structure or other development without the elevation certificate, other certification, or other evidence of compliance required in this chapter is presumed to be in violation until such time as that documentation is provided.

"Water Surface Elevation" means the height, in relation to the National Geodetic Vertical Datum (NGVD) of 1929, the North American Vertical Datum (NAVD) of 1988 (or other datum where specified), of floods of various magnitudes and frequencies in the floodplains of coastal or riverine areas.

(Ord. No. O-112-2013, § 1, 6-25-13)

Section 12-4. Application.

This chapter shall apply to all areas within the incorporated area of the city.

(Ord. No. O-112-2013, § 1, 6-25-13)

Section 12-5. Basis for establishing the areas of special flood hazard.

The areas of special flood hazard identified on the city Federal Emergency Management Agency flood insurance study (FIS) and flood insurance rate maps (FIRM), Community 475434, Panel Numbers: 0120, 0133, 0134, 0136, 0137, 0138, 0139, 0141, 0142, 0143, 0144, 0161, 0162, 0163, 0164, 0169, 0170, 0188, 0189, 0242, 0243, 0244, 0254, 0256, 0257, 0258, 0259, 0261, 0262, 0263, 0264, 0266, 0267, 0268, 0269, 0276, 0277, 0278, 0279, 0281, 0282, 0283, 0284, 0286, 0287, 0288, 0289, 0291, 0292, 0301, 0302, 0303, 0304, 0306, 0307, 0310, 0311, 0312, 0313, 0314, 0327, 0330, 0380, 0385, 0405, effective May 2, 2007 and August 5, 2013, along with all supporting technical data and any subsequent amendments or revisions, are adopted by reference and declared to be a part of this chapter.

(Ord. No. O-112-2013, § 1, 6-25-13)

Section 12-6. Requirement for development permit.

A development permit shall be required in conformity with this chapter prior to the commencement of any development activity.

(Ord. No. O-112-2013, § 1, 6-25-13)

Section 12-7. Compliance.

No land, structure or use shall hereafter be located, extended, converted, or structurally altered without full compliance with the terms of this chapter and other applicable regulations.

(Ord. No. O-112-2013, § 1, 6-25-13)

Section 12-8. Abrogation and greater restrictions.

This chapter is not intended to repeal, abrogate, or impair any existing easement, covenant, or deed restriction, existing ordinances and regulations. However, where this chapter conflicts or overlaps with another, whichever imposes the more stringent restrictions shall prevail.

(Ord. No. O-112-2013, § 1, 6-25-13)

Section 12-9. Interpretation.

In the interpretation and application of this chapter, all provisions shall be:

(1) Considered as minimum requirements;

(2) Liberally construed in favor of the governing body; and

(3) Deemed neither to limit nor repeal any other powers granted under state statutes.

(Ord. No. O-112-2013, § 1, 6-25-13)

Section 12-10. Warning and disclaimer of liability.

The degree of flood protection required by this chapter is considered reasonable for regulatory purposes and is based on scientific and engineering considerations. Larger floods can and will occur on rare occasions. Flood heights may be increased by man-made or natural causes. This chapter does not imply that land outside the areas of special flood hazard, or uses permitted within such areas, will be free from flooding or flood damages. This chapter shall not create liability on the part of the city or by any officer or employee thereof for any flood damages that result from reliance on this chapter or any administrative decision lawfully made hereunder.

(Ord. No. O-112-2013, § 1, 6-25-13)

Section 12-11. Penalties for violation.

Violation of the provisions of this chapter or failure to comply with any of its requirements, including violation of conditions and safeguards established in connection with grants of variance or special exceptions, shall constitute a violation. Any person who violates this chapter or fails to comply with any of its requirements shall, upon adjudication thereof, be assessed civil penalties and fines as provided by Tennessee law and in addition shall pay all costs and expenses involved in the case. Each day such violation continues shall be considered a separate violation. Nothing herein contained shall prevent the city from taking such other lawful actions to prevent or remedy any violation.

(Ord. No. O-112-2013, § 1, 6-25-13)

Sections 12-12—12-30. Reserved.

ARTICLE II. ADMINISTRATION

Section 12-31. Designation of the engineering department.

The engineering department is hereby appointed to administer and implement the provisions of this chapter.

(Ord. No. O-112-2013, § 1, 6-25-13)

Section 12-32. Permit procedures.

Application for a development permit shall be made to the engineering department on forms furnished by the department prior to any development activity. The development permit may include, but is not limited to, the following: plans in duplicate drawn to scale, showing the nature, location, dimensions, and elevations of the area in question; existing or proposed structures, earthen fill

placement, storage of materials or equipment, and drainage facilities. Specifically, the following information is required:

(1) Application stage.

a. Elevation in relation to mean sea level of the proposed lowest floor, including basement, of all buildings where base flood elevations are available, or to the required height above the highest adjacent grade when applicable under this chapter.

b. Elevation in relation to mean sea level to which any non-residential building will be floodproofed, where base flood elevations are available, or to the required height above the highest adjacent grade when applicable under this chapter.

c. A FEMA floodproofing certificate from a Tennessee-registered professional engineer or architect that the proposed nonresidential floodproofed building will meet the floodproofing criteria in article II, section 12-32(2).

d. Description of the extent to which any watercourse will be altered or relocated as a result of proposed development.

(2) Construction stage. Within AE zones, where base flood elevation data is available, any lowest floor certification made relative to mean sea level shall be prepared by, or under the direct supervision of, a Tennessee-registered land surveyor and certified by same. The engineering department shall record the elevation of the lowest floor on the development permit. The elevation of the lowest floor shall be determined as the measurement of the lowest floor of the building relative to the highest adjacent grade. When floodproofing is utilized for a non-residential building, said certification shall be prepared by, or under the direct supervision of, a Tennessee-registered professional engineer or architect and certified by same.

For all new construction and substantial improvements, the permit holder shall provide to the Engineering Department an as-built certification of the lowest floor elevation or floodproofing level upon the completion of the lowest floor or floodproofing.

Within approximate A zones, where flood elevation data is not available, the elevation of the lowest floor shall be determined as the measurement of the lowest floor of the building relative to the highest adjacent grade. The engineering department shall record the elevation of the lowest floor on the development permit. Any lowest floor certification made relative to mean sea level shall be prepared by, or under the direct supervision of a Tennessee-registered land surveyor and certified by same. When floodproofing is utilized for a non-residential building, said certification shall be prepared by, or under the direct supervision of, a Tennessee-registered professional engineer or architect and certified by same.

Any work undertaken prior to submission of the certification shall be at the permit holder's risk. The engineering department shall review the above-referenced certification data. Deficiencies detected by such review shall be corrected by the permit holder immediately and prior to further work being allowed to proceed. Failure to submit the certification or failure to make said corrections required hereby, shall be cause to issue a stop-work order for the project.

(Ord. No. O-112-2013, § 1, 6-25-13)

Section 12-33. Duties and responsibilities of the engineering department.

Duties of the engineering department shall include, but not be limited to:

(1) Review of all development permits to assure that the requirements of this chapter have been satisfied, and that proposed building sites will be reasonably safe from flooding.

(2) Advice to permittee that additional federal or state permits may be required, and if specific federal or state permit requirements are known, require that copies of such permits be

provided and maintained on file with the development permit. This shall include Section 404 of the Federal Water Pollution Control Act Amendments of 1972, 33 U.S.C. 1334

(3) Notification to adjacent communities and the Tennessee Department of Economic and Community Development, local planning office, prior to any alteration or relocation of a watercourse, and submission of evidence of such notification to the Federal Emergency Management Agency.

(4) For any altered or relocated watercourse, submit engineering data/analysis within six (6) months to the Federal Emergency Management Agency to ensure accuracy of community flood maps through the letter of map revision process. Assure that the flood carrying capacity within an altered or relocated portion of any watercourse is maintained.

(5) Record the actual elevation (in relation to mean sea level or highest adjacent grade, whichever is applicable) of the lowest floor (including basement) of all new or substantially improved buildings, in accordance with article II, section 12-32(2).

(6) Record the actual elevation (in relation to mean sea level or highest adjacent grade, whichever is applicable) to which the new or substantially improved buildings have been floodproofed, in accordance with article II, section 12-32(2).

(7) When floodproofing is utilized for a non-residential structure, the engineering department shall obtain certification of design criteria from a Tennessee-registered professional engineer or architect, in accordance with article II, section 12-32(2).

(8) Where interpretation is needed as to the exact location of boundaries of the areas of special flood hazard (for example, where there appears to be a conflict between a mapped boundary and actual field conditions) the engineering department shall make the necessary interpretation. The person contesting the location of the boundary shall be given a reasonable opportunity to appeal the interpretation as provided in section 12-34

(9) When base flood elevation data and floodway data have not been provided by the Federal Emergency Management Agency, then the engineering department shall obtain, review and reasonably utilize any base flood elevation and floodway data available from a federal, state or other source, including data developed as a result of these regulations, as criteria for requiring that new construction, substantial improvements, or other development in zone A on the community FHBM or FIRM meet the requirements of this chapter.

(10) All records pertaining to the provisions of this chapter shall be maintained in the office of the engineering department and shall be open for public inspection. Permits issued under the provisions of this chapter shall be maintained in a separate file or marked for expedited retrieval within combined files.

(Ord. No. O-112-2013, § 1, 6-25-13)

Section 12-34. Variance procedure.

(a) The city board of zoning appeals, as established by the city council, shall hear and decide appeals and requests for variances from the requirements of this chapter. Notice requirements shall be as established by the board for appeals of the zoning ordinance.

(b) The city board of zoning appeals shall hear and decide when it is alleged there is an error in any requirement, decision, or determination made by the engineering director in the enforcement or administration of this chapter.

(c) Any person aggrieved by the decision of the city board of zoning appeals may appeal such decision by petition to the court of record, as provided in the state enabling legislation.

(d) Variances may be issued for the reconstruction, rehabilitation or restoration of structures listed on the National Register of Historic Places or the state inventory of historic places without regard to the procedures set forth in the remainder of this section, except for

subsections (h)(1) and (h)(2), provided the proposed reconstruction, rehabilitation, or restoration will not result in the structure losing its historical designation.

(e) In passing upon such application, the city board of zoning appeals shall consider all technical evaluations, all relevant factors, and standards specified in other sections of this chapter and:

(1) The danger that materials may be swept onto other lands to the injury of others.

(2) The danger of life and property due to flooding or erosion damage.

(3) The susceptibility of the proposed facility and its contents to flood damage and the effect of damage on the individual owner.

(4) The importance of the services provided by the proposed facility to the community.

(5) The necessity to the facility of a waterfront location, where applicable.

(6) The availability of alternate locations, not subject to flooding or erosion damage, for the proposed use.

(7) The compatibility of the proposed use existing and anticipated development.

(8) The relationship of the proposed use to the comprehensive plan and floodplain management program for that area.

(9) The safety of access to the property in times of flood for ordinary and emergency vehicles.

(10) The expected heights, velocity, duration, rate of rise and sediment transport of the floodwaters and the effects of wave action, if applicable, expected at the site.

(11) The costs of providing governmental services during and after flood conditions including maintenance and repair of public utilities and facilities such as sewer, gas, electrical, and water systems, and streets and bridges.

(f) Upon consideration of the factors listed above and the purposes of this chapter, the city board of zoning appeals may attach such conditions to the granting of variances as it deems necessary to further the purposes of this chapter.

(g) Variances shall not be issued within any designated floodway if any increase in flood levels during the base flood discharge would result.

(h) Conditions for variances are as follows:

(1) Variances shall only be issued upon a determination that the variance is the minimum necessary, considering the flood hazard, to afford relief, and in the instance of an historical building, a determination that the variance is the minimum necessary so as not to destroy the historic character and design of the building.

(2) Variances shall only be issued upon a showing of good and sufficient cause, determination that failure to grant the variance would result in exceptional hardship to the applicant, and a determination that the granting of a variance will not result in increased flood heights or floodway widths, additional threats to public safety, extraordinary public expense, create nuisances, cause fraud on or victimization of the public, or conflict with existing local laws or ordinances.

(i) Any applicant to whom a variance is granted shall be given written notice specifying the difference between the base flood elevation and the elevation to which the structure is to be built and stating the cost of flood insurance will be commensurate with the increased risk resulting from the reduced lowest floor elevation.

(j) The engineering director shall maintain the records of all appeal actions and report any variances to the Federal Emergency Management Agency upon request.

(Ord. No. O-112-2013, § 1, 6-25-13)

Sections. 12-35—12-50. Reserved.

ARTICLE III. PROVISIONS FOR FLOOD HAZARD REDUCTION

Section 12-51. General standards.

In all areas of special flood hazard the following provisions are required:

(1) New construction and substantial improvements shall be anchored to prevent flotation, collapse, or lateral movement of the structure.

(2) Manufactured homes must be installed using methods and practices that minimize flood damage. They shall be elevated and anchored to prevent flotation, collapse or lateral movement. Methods of anchoring may include, but are not limited to, use of over-the-top or frame ties to ground anchors. This standard shall be in addition to and consistent with applicable state requirements for resisting wind forces.

(3) New construction and substantial improvements to existing buildings shall be constructed with materials and utility equipment resistant to flood damage.

(4) New construction or substantial improvements to existing buildings shall be constructed by methods and practices that minimize flood damage.

(5) All electrical, heating, ventilation, plumbing, air conditioning equipment, and other service facilities shall be designed and/or located so as to prevent water from entering or accumulating within the components during conditions of flooding.

(6) All new and replacement water supply systems shall be designed to minimize or eliminate infiltration of floodwaters into the system.

(7) New and replacement sanitary sewage systems shall be designed to minimize or eliminate infiltration of floodwaters into the systems and discharge from the systems into floodwaters.

(8) On-site waste disposal systems shall be located and constructed to avoid impairment to them or contamination from them during flooding.

(9) Any alteration, repair, reconstruction or improvements to a building which is in compliance with the provisions of this chapter shall meet the requirements of "new construction" as contained in this chapter.

(10) Any alteration, repair, reconstruction or improvements to a building which is not in compliance with the provisions of this chapter shall be undertaken only if said nonconformity is not extended or replaced.

(11) All new construction and substantial improvement proposals shall provide copies of all necessary federal and state permits, including section 404 of the Federal Water Pollution Control Act Amendments of 1972, 33 U.S.C. 1334

(12) All subdivision proposals and other proposed new development proposals shall meet the standards of section 12-52

(13) When proposed new construction or substantial improvements are partially located in an area of special flood hazard, the entire structure shall meet the standards for new construction.

(14) When proposed new construction or substantial improvements are located in multiple flood hazard risk zones or in a flood hazard risk zone with multiple base flood elevations, the entire structure shall meet the standards for the most hazardous flood hazard risk zone and the highest base flood elevation.

(Ord. No. O-112-2013, § 1, 6-25-13)

Section 12-52. Specific standards.

In all areas of special flood hazard, the following provisions, in addition to those set forth in section 12-5, are required:

(1) Residential construction. In AE zones where base flood elevation data is available, new construction or substantial improvement of any residential building (or manufactured home) shall have all utilities [including electrical (utility meters not included), heating, ductwork, ventilating, plumbing, and air conditioning equipment] and the lowest floor, including basement, elevated to no lower than one (1) foot above the base flood elevation. Should solid foundation perimeter walls be used to elevate a structure, openings sufficient to facilitate equalization of flood hydrostatic forces on both sides of exterior walls and to ensure the unimpeded movement of floodwaters shall be provided in accordance with standards of article III, section 12-52(3).

Within approximate A zones, where baseflood elevations have not been established and where alternative data is not available, the engineering department shall require the lowest floor of a building to be elevated to a level of at least three (3) feet above the highest adjacent grade (lowest floor and highest adjacent grade being defined in section 12-3.1 of this chapter). All applicable data including elevations or flood proofing certifications shall be recorded as set forth in article II, section 12-32. Should solid foundation perimeter walls be used to elevate a structure, openings sufficient to facilitate equalization of flood hydrostatic forces on both sides of exterior walls shall be provided in accordance with the standards of the section herein entitled "Enclosures."

(2) Nonresidential construction. In AE zones, new construction and / or substantial improvement of any commercial, industrial, or nonresidential building, when base flood elevation data is available, shall have all utilities (including electrical (utility meters not included), heating, ductwork, ventilating, plumbing, and air conditioning equipment) and the lowest floor, including basement, elevated or floodproofed to no lower than one (1) foot above the level of the base flood elevation. Should solid foundation perimeter walls be used to elevate a structure, openings sufficient to facilitate equalization of flood hydrostatic forces on both sides of exterior walls shall be provided in accordance with the standards of the section herein entitled "Enclosures."

Within approximate A zones, where baseflood elevations have not been established and where alternative data is not available, new construction and substantial improvement of any commercial, industrial, or non-residential building shall have the lowest floor of a building, including the basement, to be elevated or floodproofed to a level of at least three (3) feet above the highest adjacent grade (lowest floor and highest adjacent grade being defined in section 12-3.1 of this chapter). Should solid foundation perimeter walls be used to elevate a structure, openings sufficient to facilitate equalization of flood hydrostatic forces on both sides of exterior walls shall be provided in accordance with the standards of the section herein entitled "Enclosures."

Non-residential buildings located in all A zones may be floodproofed in lieu of being elevated, provided that all areas of the building below the required elevation are watertight with walls substantially impermeable to the passage of water, and are built with structural components having the capability of resisting hydrostatic and hydrodynamic loads and the effects of buoyancy. A registered professional engineer or architect shall certify that the design and methods of construction are in accordance with accepted standards of practice for meeting the provisions above and shall provide such certification to the engineering department as set forth in article II, section 12-32(2).

(3) Enclosures. All new construction or substantial improvements to existing buildings that include any fully enclosed areas formed by foundation and other exterior walls below the

lowest floor that is subject to flooding, shall be designed to preclude finished living space and designed to allow for the entry and exit of floodwaters to automatically equalize hydrostatic flood forces on exterior walls.

a. Designs for complying with this requirement must either be certified by a Tennessee-registered professional engineer or architect, to meet or exceed the following minimum criteria:
    1. Provide a minimum of two openings having a total net area of not less than one square inch for every square foot of enclosed area subject to flooding;
    2. The bottom of all openings shall be no higher than one foot above the finished grade; and,
    3. Openings may be equipped with screens, louvers, valves or other coverings or devices provided they permit the automatic flow of floodwaters in both directions.
b. The enclosed area shall be the minimum necessary to allow for parking of vehicles, storage or building access.
c. The interior portion of such enclosed area shall not be partitioned or finished into separate rooms in such a way as to impede the movement of floodwaters and all such partitions shall comply with the provisions of article III, section 12-52 of this chapter.

(4) Standards for manufactured homes and recreational vehicles.

a. All manufactured homes placed, or substantially improved, on:
    1. Individual lots or parcels;
    2. In expansions to existing manufactured home parks or subdivisions; or
    3. In new or substantially improved manufactured home parks or subdivisions, must meet all the requirements of new construction, including elevations and anchoring.
b. All manufactured homes placed or substantially improved in an existing manufactured home park or subdivision must be elevated so that either:
    1. In AE zones with base flood elevations, the lowest floor of the manufactured home is elevated on a permanent foundation no lower than one (1) foot above the level of the base flood elevation; or
    2. In approximate A zones without base flood elevations,, the manufactured home chassis is elevated and supported by reinforced piers (or other foundation elements of equivalent or greater strength) at least three (3) feet in height above the highest adjacent grade.
c. Any manufactured home which has incurred "substantial damage" as the result of a flood, or that has substantially improved must meet the standards of article III, section 12-52(4)b.1. and 2. of this chapter.
d. All manufactured homes must be securely anchored to an adequately anchored foundation system to resist flotation, collapse and lateral movement.
e. All recreational vehicles in an area of special flood hazard must either:
    1. Be on the site for fewer than one hundred eighty (180) consecutive days;
    2. Be fully licensed and ready for highway use. (A recreational vehicle is ready for highway use if it is licensed, on its wheels or jacking system, is attached to the site only by quick-disconnect type utilities and security devices, and has no permanently attached structures or additions); or
    3. The recreational vehicle must meet all the requirements for new construction, including anchoring and elevation requirements of article V, section 12-52(4)(a) or section l2-52(4)(b)i and ii above.

(5) Standards for subdivisions and other proposed new development proposals. Subdivisions and other proposed new development, including manufactured home parks, shall be reviewed to determine whether such proposals will be reasonably safe from flooding.

a. All subdivisions and other proposed new development proposals shall be consistent with the need to minimize flood damage.

b. All subdivisions and other proposed new development proposals shall have public utilities and facilities such as sewer, gas, electrical and water systems located and constructed to minimize or eliminate flood damage.

c. All subdivisions and other proposed new development proposals shall have adequate drainage provided to reduce exposure to flood hazards.

d. In all approximate A zones, base flood elevation data shall be provided by the project engineer for subdivision proposals and other proposed development (including manufactured home parks and subdivisions), which are greater than fifty (50) lots or five (5) acres in area.

(Ord. No. O-112-2013, § 1, 6-25-13)

Section 12-53. Standards for areas of special flood hazard zones AE with established base flood elevation but without floodways designated.

Located within the areas of special flood hazard established in article III section 12-5, where streams exist with base flood data but where no floodways have been designated (zones AE), the following provisions apply:

(1) No encroachments, including fill material, new construction or substantial improvements shall be located within areas of special flood hazard, unless certification by a Tennessee-registered professional engineer is provided demonstrating that the cumulative effect of the proposed development, when combined with all other existing and anticipated development, will not increase the water surface elevation of the base flood more than one (1) foot at any point within the community. The engineering certification should be supported by technical data that conforms to standard hydraulic engineering principles.

(2) New construction or substantial improvements of buildings, where permitted, shall comply with all applicable flood hazard reduction provisions in article III, section 12-52

(Ord. No. O-112-2013, § 1, 6-25-13)

Section 12-54. Standards for areas of shallow flooding (AO and AH zones).

Located within the areas of special flood hazard established in article I, section 12-5 are areas designated as shallow flooding areas. These areas have special flood hazards associated with base flood depths of one (1) to three (3) feet where a clearly defined channel does not exist and where the path of flooding is unpredictable and indeterminate. Therefore, the following provisions apply:

(1) All new construction and substantial improvements of non-residential and residential buildings shall have the lowest floor, including basement, elevated to at least one (1) foot above as many feet as the depth number specified on the flood insurance rate map, in feet, above the highest adjacent grade. If no flood depth number is specified on the FIRM, the lowest floor, including basement, shall be elevated at least three (3) feet above the highest adjacent grade. Openings sufficient to facilitate automatic equalization of hydrostatic flood forces on exterior walls shall be provided in accordance with standards of article III, section 12-52, and "enclosures."

(2) All new construction and substantial improvements of non-residential buildings may be flood- proofed in lieu of elevation. The structure together with attendant utility and sanitary facilities must be flood proofed and designed watertight to be completely flood-proofed to at

least one (1) foot above the flood depth number specified on the FIRM, with walls substantially impermeable to the passage of water and with structural components having the capability of resisting hydrostatic and hydrodynamic loads and the effects of buoyancy. If no depth number is specified, on the FIRM, the structure shall be flood proofed to at least three (3) feet above the highest adjacent grade. A Tennessee-registered professional engineer or architect shall certify that the design and methods of construction are in accordance with accepted standards of practice for meeting the provisions of this ordinance and shall provide such certification to the engineering department as set forth above and as required in article II, section 12-32

(3) Adequate drainage paths shall be provided around slopes to guide floodwaters around and away from proposed structures.

(Ord. No. O-112-2013, § 1, 6-25-13)

Section 12-55. Standards for areas protected by flood protection system zones (A99 zones).

Located within the areas of special flood hazard established in article III are areas of the 500-year floodplain protected by a flood protection system, but where base flood elevations have not been determined. Within these areas (A99 zones), all of the provisions of article II, section 12-31 shall apply.

(Ord. No. O-112-2013, § 1, 6-25-13)

Section 12-56. Standards for areas of special flood hazard with established base flood elevations and with floodways designated.

Located within the areas of special flood hazard established in article I, section 12-5 are areas designated as floodways. A floodway may be extremely hazardous area due to the velocity of floodwaters, debris or erosion potential. In addition, the area must remain free of encroachment in order to allow for the discharge of base flood without increased flood heights and velocities. Therefore, the following provisions apply:

(1) Encroachments, including fill material, new construction, substantial improvements or other developments are prohibited within the regulatory floodway. Development may be permitted however, provided it is demonstrated through hydrologic and hydraulic analyses performed in accordance with standard engineering practiced that the cumulative effect of the proposed encroachments or new development, when combined with all other existing and anticipated development, shall not result in any increase the water surface elevation of the base flood level, velocities or floodway widths during the occurrence of a base flood discharge at any point within the community. A Tennessee-registered professional engineer must provide supporting technical data and certification thereof, using the same methodologies as in the effective flood insurance study for the city and certification thereof.

(2) New construction or substantial improvements of buildings shall comply with all applicable flood hazard reduction provisions of article III.

(Ord. No. O-112-2013, § 1, 6-25-13)

Section 12-57. Standards for streams without established base flood elevations or floodways (A zones).

In areas located within the areas of special flood hazard established in article I, where streams exist, but no base flood data has been provided and where a floodway has not been delineated, the following shall apply:

(1) The engineering department shall obtain, review and reasonably utilize any base flood elevation, scientific or historic base flood elevation and floodway data available from federal, state or other sources, including data developed as a result of these regulations (see 2, below)

as criteria for requiring that new construction, substantial improvements, or other development in approximate A zones meet the requirements of this chapter.

(2) Require that all new subdivision proposals and other proposed developments (including proposals for manufactured home parks and subdivisions) greater than fifty (50) lots or five (5) acres, whichever is the lesser, include within such proposals base flood elevation data.

(3) Within approximate A zones, where base flood elevations have not been established and where such data is not available from other sources, require the lowest floor of a building to be elevated or floodproofed to a level of at least three (3) feet above the highest adjacent grade. All applicable data, including elevations or floodproofing certifications, shall be recorded as set forth in this chapter. Openings sufficient to facilitate automatic equalization of hydrostatic flood forces on exterior walls shall be provided in accordance with the standards of section 12-52

(4) Within approximate A zones, where base flood elevations have not been established and where such data is not available from other sources, no encroachments, including structures or fill material, shall be located within an area equal to the width of the stream or twenty (20) feet, whichever is the greater, measured from the top of the stream bank, unless certification by a Tennessee-registered professional engineer is provided demonstrating that the cumulative effect of the proposed development, when combined with all other existing and anticipated development, will not increase the water surface elevation of the base flood more than one (1) foot at any point within the community. The engineering certification should be supported by technical data that conforms to standard hydraulic engineering principles.

(5) New construction or substantial improvements of existing buildings, where permitted, shall comply with all applicable flood hazard reduction provisions of section 12-51 and 12-52. Within approximate A zones, require that these sections dealing with the alteration and relocation of a watercourse, assuring watercourse carrying capacities are maintained and manufactured home provisions are complied with as required.

(Ord. No. O-112-2013, § 1, 6-25-13)

Section 12-58. Standards for unmapped streams.

Located within the city are unmapped streams along which areas of special flood hazard are neither indicated nor identified. Adjacent to such streams, the following provisions shall apply:

(1) No encroachments including fill material or other development including structures shall be located within the riparian buffer zone as defined in the stormwater and street ordinance.

(2) When a new flood hazard risk zone, and base flood elevation and floodway data is available, new construction and substantial improvements shall meet the standards established in accordance with this chapter.

(Ord. No. O-112-2013, § 1, 6-25-13)

Chapter 14

Horticulture
(Tree Protection Ordinance)

- Cross reference— Animals, Ch. 5; buildings and building regulations, Ch. 6; garbage, trash and refuse, Ch. 13; parks and recreation, Ch. 20; streets and sidewalks, Ch. 23; waterways, Ch. 27; subdivision regulations, App. A.
- State Law reference— Authority to acquire lands for forestry purposes, T.C.A. § 11-23-101.

ARTICLE I. In General

Sections 14-1-25. Reserved.

ARTICLE II. Tree Protection

Section 14-26. Title of article.
Section 14-27. Purpose and intent of article.
Section 14-28. Definition.
Section 14-29. Applicability of article.
Section 14-30. Waiver of requirements during emergencies.
Section 14-31. Penalty for violation of article.
Section 14-32. Appeals.
Section 14-33. Site plan.
Section 14-34. Destruction or removal of trees.
Section 14-35. Protection of trees of historical or botanical importance.
Section 14-36. Planting of trees.
Section 14-37. Maintenance and replacement of trees.
Sections. 14-38—14-50. Reserved.

ARTICLE III. Trees on Public Property

Section 14-51. Short title.
Section 14-52. Purpose and intent.
Section 14-53. Definitions.
Section 14-54. Severability.
Section 14-55. Creation and duties of the tree board.
Section 14-56. Establishment of the position of urban forester.
Section 14-57. Appropriate species list.
Section 14-58. Jurisdiction.
Section 14-59. Obstruction, spacing, and location of trees.
Section 14-60. Topping and removal of trees.
Section 14-61. Municipal tree care.
Section 14-62. Tree mitigation.
Section 14-63. Emergencies.
Section 14-64. Penalty.

ARTICLE I. In General

Sections 14-1-25. Reserved.

ARTICLE II. Tree Protection

Section 14-26. Title of article.

This article may be known as the Tree Protection Ordinance of the City of Knoxville.

(Code 1962, § 22-1)

Section 14-27. Purpose and intent of article.

The purpose and intent of this article is to encourage the preservation and protection of trees within the city because of the unique benefits they provide the community in assisting the natural control of solar heat, soil conservation, flood control, air pollution and noise; in providing a haven for community wildlife; and in providing citizens with psychological relief from the increasing complexities of the manmade urban environment. It is not intended to be punitive nor to cause hardships on those individuals and concerns exercising reasonable care and diligence to protect trees.

(Code 1962, § 22-2)

Section 14-28. Definition.

For the purposes of this article, the word "tree" shall mean any woody plant which:

(1) Has a trunk six (6) inches or more in diameter at one (1) foot above the ground; or
(2) Is of a horticultural variety or is highly ornamental, such as a dogwood, redbud, crabapple, sourwood, flowering cherry or peach, southern magnolia, holly or any like or similar plant, and has a trunk diameter of three (3) inches or more at one (1) foot above the ground.

(Code 1962, § 22-3)
Cross reference— Definitions and rules of construction generally, § 1-2.

Section 14-29. Applicability of article.

(a) This article shall apply to all real property within the city, including all commercial, industrial, business or multifamily and subdivision property, with the following exceptions:
    (1) It shall not apply to any parcel of land used for a single-family dwelling or duplex.
    (2) It shall not apply to the approaches (clear zones) to any airports located in the city limits, to the easements or rights-of-way of utility companies, or to federal, state or local governments.
    (3) It shall not apply to containerized trees or nursery stock trees for resale in commercial nurseries or garden centers.
(b) Trees being provided on the site in compliance with other regulations may be used for compliance with this article where minimum size and species standards are maintained.

(Code 1962, § 22-4)

Section 14-30. Waiver of requirements during emergencies.

In case of emergencies such as windstorms, ice storms or other disasters, the requirements of this article may be waived by the city horticulturist during emergency periods so as not to hamper private and public work to restore order in the city.

(Code 1962, § 22-9)

Section 14-31. Penalty for violation of article.

Any person violating any provisions of this article shall be punished as provided in section 1-9.

(Code 1962, § 22-10)

Section 14-32. Appeals.

Except as otherwise provided, appeals from decisions of the city horticulturist under this article shall be to the courts of record by petition setting forth that such decision is illegal in whole or in part and specifying the grounds of the illegality. Such petition shall be filed within sixty (60) days after the receipt of the city horticulturist's decision.

(Code 1962, § 22-11)

Section 14-33. Site plan.

(a) Where no building permit or subdivision approval is required for activities regulated under this article, the developer shall submit a site plan to the city horticulturist. The plan shall generally locate groups of trees and the predominant species in those areas to be cleared of trees.
(b) Where application for a building permit or preliminary subdivision plat is required by the city, a site plan locating trees to be retained or provided, and their species, shall be submitted with such application for review by the city horticulturist. Such plan shall be approved unless notice to the contrary is given within ten (10) working days of the application. In the event of disapproval, the reasons for such disapproval shall be reported in writing to the applicant.

(Code 1962, § 22-8)

Section 14-34. Destruction or removal of trees.

(a) Clearing and grading work. Where a building permit or subdivision approval has not been issued, the destruction, within any five-year period, of more than twenty-five (25) percent of the trees on any one (1) parcel of nonexempt land, without the prior approval of the city horticulturist, shall be prohibited.
(b) Land development and new construction. Where a building permit for new construction or subdivision approval is required, a minimum of six (6) trees per acre shall be retained on the site unless because of cut or fill work such trees cannot be saved.

(Code 1962, § 22-5(a), (b))

Section 14-35. Protection of trees of historical or botanical importance.

(a) No living tree within the city with a trunk diameter of twenty (20) inches or more at one (1) foot above the ground which is located within one hundred fifty (150) feet of any building built in or before the year 1860 shall be cut or otherwise substantially altered by pruning, trimming or otherwise cutting more than twenty (20) percent of the woody area of such tree without first obtaining a permit from the city horticulturist.
(b) Permits as noted in subsection (a) of this section shall be issued only upon a satisfactory showing that the tree in question is not of such historical or botanical importance that the public interest would be served through the preservation of such tree.
(c) If the city horticulturist fails to issue a permit as provided in this section within thirty (30) days of the application for the permit, such permit shall be considered to be denied. Any person denied such permit may appeal the denial directly to council by filing notice of such appeal with the city recorder within fifteen (15) days of the denial, and the appeal shall be placed upon council's agenda for consideration at the next regularly scheduled council meeting. The council shall consider the matter de novo and may uphold denial of the permit, order the permit to be issued, or order a permit under such terms and conditions as council deems appropriate considering the totality of the circumstances.

(Code 1962, § 22-5(c))

Section 14-36. Planting of trees.

Where trees cannot be retained pursuant to this article, or do not exist on the site, they shall be provided, within twelve (12) months of construction completion, at the rate of eight (8) trees per acre, with at least one-half of the required number being species capable of attaining a height of fifty (50)

feet or more at maturity. Such trees shall have a minimum trunk diameter of two (2) inches at six (6) inches above ground at planting, unless of an ornamental variety, which shall have a minimum trunk diameter of one and one-fourth (1¼) inches at six (6) inches above ground at planting.
(Code 1962, § 22-6)

Section 14-37. Maintenance and replacement of trees.
All trees retained or provided to meet the requirements of this article shall be properly maintained to ensure their survival for a period of at least eighteen (18) months from the date of complete construction, final plat approval or planting. Any tree which fails to survive eighteen (18) months shall be replaced within twelve (12) months of loss.
(Code 1962, § 22-7)

Sections. 14-38—14-50. Reserved.

ARTICLE III. TREES ON PUBLIC PROPERTY

Section 14-51. Short title.
This article may be cited as the "trees on public property" ordinance.
(Ord. No. O-447-91, § 1, 10-29-91)

Section 14-52. Purpose and intent.
The purpose and intent of this article is to increase public safety while encouraging the conservation, protection, and management of trees on public property within the city because of the unique benefits they provide the community in assisting the natural control of solar heat, soil conservation, flood control, air pollution and noise; in providing a haven for community birds and wildlife; in providing citizens with relief from aesthetic degradation of the manmade environment and in helping increase the economic appeal of a community. In furtherance of this purpose, this article also creates a city tree board and establishes an urban forester to achieve the objectives of this article.
(Ord. No. O-447-91, § 2, 10-29-91; Ord. No. O-88-2014, § 1, 5-13-14)

Section 14-53. Definitions.
The following words shall have the meanings assigned to them wherever such words appear in this article:

American National Standards Institute (ANSI). These are generally accepted industry standards, and for this article arboriculture standards for tree care are defined in the current edition of American National Standards Institute ANSI A300 series and ANSI Z133.

Arbor Day Foundation Standards. Standards for becoming a Tree City USA, Tree Campus USA, or Tree Line USA.

Caliper. This is a size measurement for newly planted and nursery stock trees. This measurement is made at six (6) inches above grade.

City. The City of Knoxville, Tennessee

City of Knoxville Species List. List of approved tree species that can be planted within the City of Knoxville, Tennessee.

City property. All real property which is owned or leased by the city or which is maintained by it, or any part of any improved public right-of-way.

Critical root zone. The soil area below ground and the space above ground defined by measuring one (1) foot radius away from the trunk of the tree for every inch diameter at breast height (DBH).

Diameter at breast height (DBH). This is a diameter measurement for existing or established trees. This standard of measure is made at four and one-half (4.5) feet above the ground.

Property owner. The person owning property or the owner as shown by the county property assessor's records.

Public service department. The designated unit of the city under whose jurisdiction a public tree falls.

Public tree. All trees now and hereafter that have been planted or maintained by the city, and/or grow on any city property.

Right-of-way. That property located within and adjoining the alleys, streets, roads, highways, and public easements within the city for which the city has the right to improve or maintain.

Topping. The severe and/or indiscriminate cutting back of limbs or trunks within the canopy of a tree so as to remove the normal canopy and disfigure the tree. The practice of not pruning back to lateral branches.

Tree. For purposes of this article only, trees shall be considered to be plants woody in structure with an anticipated mature height of at least fifteen (15) feet.

Tree mitigation. The process of replacing trees and tree benefits that have been or will be lost through tree removal or pruning based on the species, size, health, and location of the tree.

Treelawn. An area of maintained property not covered by sidewalk or other paving, located between a public sidewalk and edge of pavement within the right-of-way that can grow vegetation.

Urban forester. The City of Knoxville Urban Forester or other designated official of the city, assigned to carry out the enforcement of this article.

Urban forestry division. A proactive program for managing trees within the public service department as a public resource.

(Ord. No. O-447-91, § 3, 10-29-91; Ord. No. O-88-2014, § 2, 5-13-14)

Section 14-54. Severability.

Should any part or provision of this article be declared by a court of competent jurisdiction to be invalid, the same shall not affect the validity of the article as a whole or any part thereof other than the part held to be invalid.

(Ord. No. O-88-2014, § 3, 5-13-14)

❖ Editor's note— Ord. No. O-88-2014, § 3, adopted May 13, 2014, amended the Code by repealing former § 14-54, and adding a new § 14-54. Former § 14-54 pertained to creation and duties of the tree board, and derived from Ord. No. O-447-91, adopted October 29, 1991; and Ord. No. O-423-03, adopted November 25, 2003. Similar provisions can be found in § 14-55.

Section 14-55. Creation and duties of the tree board.

(a) There is hereby created and established a city tree board to be known and designated as the "Knoxville Tree Board." The city tree board shall consist of eleven (11) members, seven (7) of which must be citizens and residents of the city. The four (4) remaining members may reside outside the city, but within the county. All members are to be nominated by the mayor and approved by city council. At least five (5) of the members shall be professionals, including a landscape architect, a horticulturist or forester, and an educator. One (1) member shall be a representative of Knoxville Utilities Board. The members should include broad representation from community groups, neighborhood associations, environmental groups, builders, developers, and other civic organizations. The urban forester, a representative from the city engineering department, and a representative from the metropolitan planning commission shall attend meetings of the board and shall render information and advice to the board members; however, they shall have no vote in the processes thereof. Persons appointed to the board shall serve a term of four (4) years or until their successors are duly nominated and approved, with three (3) terms expiring each year. Vacancies caused by death, resignation, or otherwise, shall be filled for the unexpired term in the same manner as original appointments are made. The members shall serve without pay.

(b) The duties of the city tree board shall be as follows:

(1) To study the problems and determine the needs of the city in connection with its urban forestry program in order to maintain Tree City USA status through the Arbor Day Foundation and to report from time to time to the governing body of the city as to desirable legislation concerning the urban forestry program and related activities for the city. The city tree board shall recommend for approval by the city council such rules and regulations as the board shall deem advisable and necessary in order to perform its duties as set forth herein.
(2) To assist the properly constituted officials, as well as city council and the citizens of the city, in the dissemination of news and information regarding the selection, planting, establishment, protection, and maintenance of trees within the corporate limits of the city and to make recommendations from time to time to the city council relative to desirable legislation concerning the tree program and tree related activities on city property.
(3) To provide regular and special meetings at which the subject of trees, insofar as it relates to the city, may be discussed by members of the tree board and, when requested by the tree board, officers and personnel of the city, and all other persons interested in the tree program. The board shall also adopt procedures as it may deem necessary for holding and conducting its regular and special meetings.

(Ord. No. O-88-2014, § 4, 5-13-14)

❖ Editor's note— Ord. No. O-88-2014, § 4, adopted May 13, 2014, amended the Code by repealing former § 14-55, and adding a new § 14-55. Former § 14-55 pertained to the appropriate species list, and derived from Ord. No. O-447-91, adopted October 29, 1991. Similar provisions can be found in § 14-57.

Section 14-56. Establishment of the position of urban forester.

(a) An urban forester shall be employed by the governing body of the city after a competitive examination and interview given by the public service department. He or she shall be a person skilled and trained in the arts and sciences of municipal arboriculture, and shall hold a college degree in urban forestry, arboriculture, ornamental or landscape horticulture, or other closely related field and is charged with overseeing the urban forestry division. He or she shall have had at least five (5) years' experience in municipal urban forestry work or its equivalent. He or she shall be a certified arborist through the International Society of Arboriculture prior to employment. The office of the urban forester shall be an administrative unit of the public service department. Should the office of urban forester be vacant, the authority of that office shall be transferred to the director of public service or other designated official until such time as the urban forester position is filled.
(b) The urban forester shall receive a salary to commensurate with his or her training and experience as full compensation for all services rendered and in lieu of all fees.
(c) The duties of the urban forester shall be as follows:
(1) The urban forester shall have the authority and jurisdiction of regulating the planting, maintenance, protection, and removal of public trees to insure safety and preserve and enhance the aesthetics of city property. The urban forester shall promulgate the rules and regulations of the urban forestry program and this chapter and work with the tree board on education of proper arboriculture practices for both public and private trees. He or she shall cause the provisions of this chapter to be enforced. All city departments shall coordinate with the urban forester on projects concerning the planting, maintenance, protection and removal of public trees.
(2) The urban forester shall have the authority to approve or deny permits for planting, maintenance, and/or removal of public trees. It shall also be his or her duty to supervise or inspect all work done under a permit issued in accordance with the terms of this article.
(3) The urban forester shall have the authority to formulate and amend the urban forestry management plan(s) as needed, perform and maintain a tree inventory, and create other

relevant documents for the urban forestry program with the advice and assistance of the tree board.

(4) The urban forester shall be a municipal enforcement officer, as set forth in chapter 2 of the Knoxville City Code.

(Ord. No. O-88-2014, § 5, 5-13-14)

❖ Editor's note— Ord. No. O-88-2014, § 5, adopted May 13, 2014, amended the Code by repealing former § 14-56, and adding a new § 14-56. Former § 14-56 pertained to the spacing and location of trees on municipal property, and derived from Ord. No. O-447-91, adopted October 29, 1991. Similar provisions can be found in § 14-59.

Section 14-57. Appropriate species list.

The urban forester shall formulate a species list of trees acceptable for planting on all city property. That list shall consist of small trees under thirty (30) feet tall, medium trees thirty (30) to fifty (50) feet tall, and large trees over fifty (50) feet in height. No species other than those included in this list may be planted on city property without application to and written permission received from the urban forester. That species list shall be made available for reference and be called the "City of Knoxville Species List."

(Ord. No. O-88-2014, § 6, 5-13-14)

❖ Editor's note— Ord. No. O-88-2014, § 6, adopted May 13, 2014, amended the Code by repealing former § 14-57, and adding a new § 14-57. Former § 14-57 pertained to municipal tree care, and derived from Ord. No. O-447-91, adopted October 29, 1991. Similar provisions can be found in § 14-61.

Section 14-58. Jurisdiction.

The city shall have the right to plant, care for, maintain, remove, and replace all public trees, shrubs and other plantings as may be necessary to insure public safety or to preserve or enhance the symmetry and beauty of such public property or within the right-of-way.

(Ord. No. O-88-2014, § 7, 5-13-14)

❖ Editor's note— Ord. No. O-88-2014, § 7, adopted May 13, 2014, amended the Code by repealing former § 14-58, and adding a new § 14-58. Former § 14-58 pertained to emergencies, and derived from Ord. No. O-447-91, adopted October 29, 1991. Similar provisions can be found in § 14-63.

Section 14-59. Obstruction, spacing, and location of trees.

(a) It shall be the duty of any person or persons owning or occupying real property bordering on any street upon which property there may be trees, to prune or plant trees in such manner that they will not obstruct or shade street lights, will not obstruct the passage of pedestrians on sidewalks, will not obstruct vision of traffic signs, will not obstruct the view of any street or alley intersection, will not obstruct a public sidewalk, will not interfere with utility equipment and/or facilities or their safety clearances, or otherwise endanger the public. Property owners shall remove all dead, diseased or dangerous trees, or broken or decayed limbs which constitute a menace to the safety of the public. The minimum clearance of any overhanging portion thereof should be eight (8) feet over sidewalks, and twelve (12) feet over all streets and vehicular use areas except truck thoroughfares which shall have a minimum clearance of fourteen (14) feet.

(b) No trees shall be planted closer than ten (10) feet to any fire equipment including water meters, fire hydrants, and post indicator valves. No tree shall be planted within thirty (30) feet of a street intersection. Public tree planting that will affect utility operations or maintenance of their safety clearances shall be approved by the affected utility owner. A treelawn should be at least four (4) feet in width to plant a medium tree, and at least five (5) feet in width to plant a large tree.

(c) The urban forester shall determine where such restrictions may be relaxed or modified based on site-specific, physical, and biological factors.

(Ord. No. O-88-2014, § 8, 5-13-14)

❖ Editor's note— Ord. No. O-88-2014, § 8, adopted May 13, 2014, amended the Code by repealing former § 14-59, and adding a new § 14-59. Former § 14-59 pertained to exemptions, and derived from Ord. No. O-447-91, adopted October 29, 1991.

Section 14-60. Topping and removal of trees.

It shall be unlawful for any person, or city employee or contractor to remove any tree on city property without written approval by the urban forester. Topping of trees located on city property or within the right-of-way is prohibited. Trees severely damaged by storms or other causes, or certain trees causing obstructions where other pruning practices are impractical are exempted from this provision.

(Ord. No. O-88-2014, § 9, 5-13-14)

❖ Editor's note— Ord. No. O-88-2014, § 9, adopted May 13, 2014, amended the Code by repealing former § 14-60, and adding a new § 14-60. Former § 14-60 pertained to penalties, and derived from Ord. No. O-447-91, adopted October 29, 1991. Similar provisions may be found in § 14-64.

Section 14-61. Municipal tree care.

(a) It shall be unlawful, without authorization from the urban forester or the director of the public service department, to plant, spray, fertilize, prune, top, or remove any tree on city property. Attachment of any foreign materials such as ropes, wire, nails, posters or any other contrivance to any public tree is prohibited. Requirements for species, spacing, location, and maintenance should be made available to the public at the application filing place which may include an online application process. Maintenance of trees threatening public health, safety, or welfare, structures or underground or overhead utilities may be exempted from this provision through a general permit issued by the urban forester.

(b) Any pruning, planting, or other tree maintenance practices on a public tree shall conform to the current edition of American National Standards Institute ANSI A300 and ANSI Z133.

(c) Mulch or soil shall not be placed within the critical root zone of a tree on city property or within the right-of-way in a manner that is harmful to a tree. Mulch and soil shall not touch the trunk of the tree. Mulch shall not be greater than three (3) inches in depth.

(d) The critical root zone of a public tree shall not be disturbed without obtaining a written permit from the urban forester. The written permit shall state what best management practices must be in place before work within, near, or adjacent to the critical root zone commences, and what best management practices must be in place throughout the duration of the project. Disruption of roots includes the grading, removal, or grubbing of soil; any excavating or trenching of soil; the use of equipment and vehicles within the critical root zone; and any depositing of material such as stone, brick, sand, or concrete within the critical root zone. Upon good cause shown, the urban forester may alter or waive the foregoing requirements at his/her discretion. Construction, operations and maintenance in compliance with Arbor Day Foundation or ANSI standards, unless no practical alternative exists, may be approved under an annual general permit issued by the urban forester.

(e) A person, firm, or contractor receiving a permit must abide by any standards and practices adopted by the urban forester and by other reasonable conditions imposed in the permit by the urban forester. Permits are on file at the city public service department.

(f) Applications for permits are on file at the city public service department. The permit must be approved and signed by the urban forester not less than seventy-two (72) hours in advance of the time the work is to be done and the urban forester shall have forty-eight (48) hours to review all applications. Any permit filed will have a definite date of expiration and work shall be completed in the time allowed on the permit and in the manner as therein described. Any permit shall be void if its terms are violated.

(g) Unless stated otherwise in the permit, notice of completion shall be given within five (5) days to the urban forester for his or her inspection. The urban forester will inspect work based on conditions imposed in the permit and this article. Inadequate or improper work completed with a permit is subject to the section 14-64, if not remediated within fourteen (14) days of notification from the urban forester.

(Ord. No. O-88-2014, § 10, 5-13-14)

Section 14-62. Tree mitigation.

(a) As determined by the urban forester, healthy public trees removed or with more than twenty-five (25) percent of the critical root zone or tree canopy disrupted or injured during construction, development, or road expansion shall require tree mitigation. The person or firm responsible for such work shall be required to mitigate for loss of tree benefits by replacing removed, disrupted or injured trees with 2-inch caliper replacement trees. The total caliper inches of replacement trees should equal or be greater than the DBH of the tree removed, disrupted, or injured. Upon good cause shown, the urban forester may alter or waive the foregoing requirements at his/her discretion. This requirement shall not apply to construction, operations, and maintenance in compliance with Arbor Day Foundation or ANSI standards where an annual general permit has been issued by the urban forester.

(b) All replacement trees must meet the latest version of American Standard for Nursery Stock ANSI Z60 and be planted according to the latest version of American National Standard ANSI A300 planting and transplanting best management practices. Urban forester shall be given five (5) days notice when planting is complete, and may inspect planted trees and refuse any stock or plantings that do not meet requirements. All planting shall be completed between November and March of each year. Inadequate or improper planting is subject to the "penalty" section of this article if not remediated within fourteen (14) days of notification from the urban forester.

(c) The urban forester shall determine type of trees and locations for mitigation planting.

(Ord. No. O-88-2014, § 11, 5-13-14)

Section 14-63. Emergencies.

In case of emergency such as windstorm, ice storm, natural disaster or such other events that jeopardize public safety, the requirements of this article may be waived by the urban forester pursuant to rules and regulations issued hereunder so as not to hamper private and public work to abate the emergency conditions within the city.

(Ord. No. O-88-2014, § 12, 5-13-14)

Section 14-64. Penalty.

(a) Any violation of this article shall be punished as set forth in section 1-9 of the Knoxville City Code. Each subsequent day that any violation continues unabated shall constitute a separate offense. In addition, any person found to be in violation of this article shall be responsible for any incurred maintenance and actual cost by the city for mitigating any violations.

(b) In addition to other violations, any person found to be in violation of this article through the action of damaging, removing, or topping a tree either willfully or accidentally, or significantly disturbing the critical root zone of a tree on public property beyond repair shall be responsible for the reimbursement to the city for the value of the tree described in the latest edition of the Guide for Plant Appraisal by the Council of Tree and Landscape Appraisers.

(Ord. No. O-88-2014, § 13, 5-13-14)

Chapter 22.5

STORMWATER AND STREET ORDINANCE

ARTICLE I. In General

Section 22.5-1. Title of chapter.
Section 22.5-2. Purpose.
Section 22.5-3. Administration of chapter.
Section 22.5-4. Definitions.
Section 22.5-5. Performance and Indemnity Agreement.
Section 22.5-6. Right of entry.
Section 22.5-7. Notice of Violation.
Section 22.5-8. Penalties.
Section 22.5-9. Board of Environmental Appeals.
Section 22.5-10. Appeals.
Section 22.5-11. Severability.
Sections 22.5-12-17. Reserved.

ARTICLE II. Site Development Criteria

Section 22.5-18. Purpose.
Section 22.5-19. Approval of plan required prior to issuance of a building permit.
Section 22.5-20. Partial plat process.
Section 22.5-21. General design criteria.
Section 22.5-22. Site development design manuals.
Section 22.5-23. Stormwater detention.
Section 22.5-24. Erosion and sediment control.
Section 22.5-25. Objectives of erosion and sediment control.
Section 22.5-26. Site development permit required before site development.
Section 22.5-27. Site development permit requirements.
Section 22.5-28. Temporary emergency exemption.
Section 22.5-29. Fees.
Section 22.5-30. Violation of a site development permit.
Section 22.5-31. Design standard for detention and/or retention ponds.
Section 22.5-32. Requirements for developments draining to a sinkhole.
Section 22.5-33. Hydrologic and hydraulic computations.
Section 22.5-34. Maintenance of stormwater facilities.
Section 22.5-35. Acceptance of streets and stormwater systems within public rights-of-way.
Section 22.5-36. First flush requirements for detention ponds.
Section 22.5-37. Technical requirements for special pollution abatement permits.
Section 22.5-38. Additional permits required.
Section 22.5-39. NPDES permits.
Section 22.5-40 Riparian buffer zone.
Sections 22.5-41-49. Reserved.

ARTICLE III. Illicit Connections and Illegal Dumping

Section 22.5-50.	Findings of fact.
Section 22.5-51.	Objectives.
Section 22.5-52.	Prohibitions.
Section 22.5-53.	Notification of spills and illicit discharges.
Section 22.5-54.	Requirements for monitoring.
Sections 22.5-55-60.	Reserved.

This ordinance was initially issued in June 1997 (Ordinance O-224-97) with further revisions in December 1997 (Ordinance O-666-97), May 1998 (Ordinance O-247-98), May 2003 (Ordinance O-155-03), June 2003 (Ordinance O-264-03), August 2004 (Ordinance O-139-04), January 2005 (Ordinance O-16-05), February 2005 (Ordinance O-45-05), and February 2013 (Ordinance O-26-2013.

ARTICLE I. IN GENERAL

Section 22.5-1. Title of chapter.

This chapter shall be known and may be cited as the "Stormwater and Street Ordinance of the City of Knoxville."

(Ord. No. O-139-04, § 1, 8-17-04)

Section 22.5-2. Purpose.

The purpose of this chapter is to consolidate all regulations pertaining to the stormwater system and the local street system and to accomplish the following:

(1) Improve stormwater management;
(2) Control the discharge of pollutants to the stormwater system;
(3) Improve public safety;
(4) To comply with the city's NPDES permit;
(5) Establish procedures to accomplish the above purposes.

(Ord. No. O-139-04, § 1, 8-17-04)

Section 22.5-3. Administration of chapter.

The engineering director and the engineering staff under the director's supervision shall administer the provisions of this chapter.

(Ord. No. O-139-04, § 1, 8-17-04)

Section 22.5-4. Definitions.

Unless specifically defined in this section, words or phrases used in this chapter shall be interpreted so as to give them the meaning they have in common usage, and to give this chapter its most reasonable application.

One-year frequency storm. A storm event defined to be two and one-half (2.5) inches in twenty-four (24) hours or other such magnitude the engineering director shall establish based upon scientific and engineering information.

Two-year frequency storm. A storm event with a fifty (50) percent chance of being equaled or exceeded in a given year. Defined to be three (3.0) inches in twenty-four (24) hours or other such magnitude the engineering director shall establish based upon scientific and engineering information.

Five-year frequency storm. A storm event with a twenty (20) percent chance of being equaled or exceeded in any given year. Defined to be three and seven-tenths (3.7) inches in twenty-four (24) hours or other such magnitude the engineering director shall establish based upon scientific and engineering information.

Ten-year frequency storm. A storm event with a ten (10) percent chance of being equaled or exceeded in any given year. Defined to be four and three-tenths (4.3) inches in twenty-four (24) hours or other such magnitude the engineering director shall establish based upon scientific and engineering information.

Twenty-five-year frequency storm. A storm event with a four (4) percent chance of being equaled or exceeded in any given year. Defined to be five (5.0) inches in twenty-four (24) hours or other such magnitude the engineering director shall establish based upon scientific and engineering information.

Fifty-year frequency storm. A storm event with a two (2) percent chance of being equaled or exceeded in any given year. Defined to be five and seven-tenths (5.7) inches in twenty-four (24) hours or other such magnitude the engineering director shall establish based upon scientific and engineering information.

One hundred-year frequency storm. A storm event with a one (1) percent chance of being equaled or exceeded in any given year. Defined to be six and three-tenths (6.3) inches in twenty-four (24) hours or other such magnitude the engineering director shall establish based upon scientific and engineering information.

Five hundred-year frequency storm. A storm event with a one-fifth (1/5) of one (1) percent chance of being equaled or exceeded in any given year. Defined to be eight (8.0) inches in twenty-four (24) hours or other such magnitude the engineering director shall establish based upon scientific and engineering information.

Administrative plat. A plat prepared and certified by a registered land surveyor and approved or denied for recording by the metropolitan planning commission (MPC) through staff administrative procedures. A plat shall be classified as an administrative plat when it meets one (1) or more of the following criteria:

(1) It divides one (1) tract into no more than two (2) lots;
(2) It combines existing lots into no more than two (2) lots;
(3) It adjusts the common lot line(s) between two (2) existing recorded lots;
(4) It is for the purpose of recording an easement or other new information and no subdivision of land is involved; or
(5) It qualifies as an exempt or corrected plat as defined by the city-county minimum subdivision regulations.

Best management practices manual (BMP manual). A manual produced by the city containing best management practices for use on site development plans and construction projects.

Blue-line stream. Any stream shown on the 7.5 minute USGS quad maps.

Board of environmental appeals. Appointed by the mayor and confirmed by council to hear appeals filed by any person incurring a civil penalty or damage assessment imposed pursuant to section 22.5-8 of this chapter.

Condominium (condo) development. A development of attached or detached units where the individual units take access from a private drive that is neither a joint permanent easement nor city right-of-way.

Covenants by lessee for maintenance of stormwater facilities on leased property. A legal document executed by a lessee and recorded with the county register of deeds guaranteeing proper maintenance of stormwater facilities during the term of the lessee's lease and the proper removal of the water quality facilities at the end of the term of the lessee's lease.

Covenants by property owner for permanent maintenance of stormwater facilities. A legal document executed by the property owner and recorded with the county register of deeds guaranteeing perpetual and proper maintenance of stormwater facilities.

Detention. A practice to store stormwater runoff by collection as a temporary pool of water and provide for its gradual (attenuated) release and thereby control peak discharge rates.

Development certification. As-built, field-verified plans signed and sealed by a registered professional engineer and a registered land surveyor, both licensed to practice in the state, showing contours, elevations, grades, locations, drainage and hydraulic structures, and detention basin volumes.

Development, large residential and commercial. Any development, commercial, office, industrial, multiple single family lots, any nonresidential use, or any development of a single residential lot with a disturbed area of ten thousand (10,000) square feet, etc.

Development, small single family residential. Development of a single recorded residential lot with less than ten thousand (10,000) square feet of disturbed area.

Development, utilities. Physical alteration of any location for the purpose of installing utilities. This includes, but is not limited to, providing access to a site, clearing of vegetation, grading, earth moving, providing utilities, other services such as parking, altering land forms, and installing erosion control systems.

Downstream. Downgradient from the lowest point of each subwatershed in a development.

Discharge. Dispose, deposit, spill, pour, inject, seep, dump, leak or place by any means, or that which is disposed, deposited, spilled, poured, injected, seeped, dumped, leaked, or placed by any means including any direct or indirect entry of any solid or liquid matter into the stormwater system by any means intentional or otherwise.

Disturbed area. Portion of any site that has been altered from existing conditions, including but not limited to the following: providing access to a site, clearing of vegetation, grading, earth moving, providing utilities and other services such as parking facilities, stormwater management and erosion control systems, potable water and wastewater systems, altering land forms, or construction or demolition of a structure on the land.

Erosion. The removal of soil particles by the action of water, wind, ice or other geological agents, whether naturally occurring or acting in conjunction with or promoted by anthropogenic activities or effects.

Extended detention. A practice to store stormwater runoff by collection as a temporary pool of water and provide for its gradual (attenuated) release over a minimum of twenty-four (24) hours and no more than seventy-two (72) hours and thereby control peak discharge rates and allow for gravity-driven settling of some types of pollutants. A practice which is used to control peak discharge rates, and which provides gravity settling of pollutants.

First flush. The initial or early stages of stormwater runoff from a storm event which commonly delivers a disproportionately large amount of previously accumulated pollutants due to the rapid rate of runoff. The first flush is defined as the first one-half (½) inch of direct runoff from the contributing drainage basin.

Floodplain. For a given flood event, that area of land temporarily covered by water which adjoins a watercourse.

Hydraulic. Pertaining to, involving, moved or operated by a fluid, especially water, under pressure or under a gravity-driving force.

Hydrologic. Pertaining to the scientific study of the properties, distribution, and effects of water on the earth's surface, in the soil and underlying rocks, and in the atmosphere.

Illicit discharge. Any discharge to the stormwater system that is not composed entirely of stormwater and not specifically exempted in article III.

Impervious area. Impermeable surfaces, such as pavement or rooftops, which prevent the percolation of water into the soil.

Infiltration. A practice designed to promote the recharge of groundwater by containment and concentration of stormwater in porous soils.

Infiltration basin. An impoundment made by excavation or embankment construction to contain and infiltrate runoff into the soil layer.

Land development manual (LDM). Manual produced by the city that provides additional information about the specifics of this chapter.

Lessee. A lessee occupying real property pursuant to a lease agreement entered into prior to February 4, 1987, which contains no contractual provisions requiring the landlord to execute property owner's covenants, whose site development plan is five (5) acres or less, and whose use of the real property will not create environmental hazards.

Main stream. A stream on which floods are controlled by the Tennessee Valley Authority reservoir system, i.e., the Tennessee and Holston Rivers.

Major storm. A one hundred-year design storm or a storm that has a probability of one (1) percent chance in any given year.

Mitigation. The restoration, enhancement, or preservation of a stream and adjacent land which offsets expected adverse impacts of development.

Natural resources conservation service (NRCS). An organization within the U.S. Department of Agriculture that has published standard drainage procedures in the form of Technical Release No. 55. Formerly known as the soil conservation service (SCS).

Outfall. The terminus of a stormwater system where the contents are released.

Parking area. The off-street facility including parking spaces along with adequate provision for drivers and aisles for maneuvering and giving access, and for entrance and exit, designed to be usable for the parking of vehicles.

Partial plat. A survey plat prepared and certified by a registered land surveyor for recording as an exhibit to a written legal document that describes and establishes property easements and access for stormwater facilities. Only that portion of the total property necessary to show new easements relative to the property boundaries and all other conflicting property rights or uses must be included.

Peak flow. The maximum instantaneous rate of flow of water at a particular point resulting from a storm event.

Peak flow attenuation. The reduction of the peak discharge of a storm.

Performance and indemnity agreement. A contract between the property owner, lessee or developer and the city that assures construction and compliance as per site development plans approved by the department of engineering and in the case of a lessee, assures the lessee's proper maintenance of stormwater facilities during the term of its lease, and the proper removal of water quality facilities by the lessee at the end of the term of its lease.

Person. Any individual, firm, corporation, partnership, association, organization or entity, including governmental entities, or any combination thereof.

Redevelopment. The improvement of fifty (50) percent of the assessed value of the lot, building, or lot use.

Regulated waters. Any Stream, wetland or other waterbody specified by the engineering director, where protections are imposed for adjacent land use, development or vegetative cover.

Restaurant. An establishment or facility where food is prepared and sold.

Retention. A practice designed to store stormwater runoff by collection as a permanent pool of water without release except by means of evaporation, infiltration, or attenuated release when runoff volume exceeds storage capacity of the permanent pool.

Riparian buffer zone. A naturally undisturbed, vegetated and pervious streamside zone that is protected from clearing, grading, filling, paving, building, or other destruction of the naturally vegetated state. *Riprap*. A combination of large stone, cobbles and boulders used to line channels, stabilize stream banks, and reduce runoff velocities.

Runoff. The water resulting from precipitation that is not absorbed by the soil.

Sanitary sewer. A system of underground conduits that collect and deliver sanitary wastewater to a wastewater treatment plant.

Sanitary wastewater. Wastewater from toilets, sinks and other plumbing fixtures.

Sewage. Human wastes carried by water from residences, buildings, industrial establishments or other places, together with such industrial wastes, stormwater or other water as may be present; or any substance discharged from a sanitary sewer collection system.

Sinkhole.

(1) A naturally occurring depression where drainage collects in the earth's surface that is a minimum of two (2) feet deep. These depressions are typically denoted as closed contours and are shown as hachured contours on the city's geographic information system, or

(2) A hole, fissure or other opening in the ground, often underlain with limestone, dolomite or other rock formation that provides for and is being designated as a natural conduit for the passage of stormwater.

For both (1) and (2) above, the extent of the area considered to be a sinkhole is at a minimum the limits determined by the one hundred-year water surface elevation, assuming plugged conditions (zero (0) cfs outflow).

Site development. To physically alter a site. Site development includes, but is not limited to, providing access to a site, clearing of vegetation, grading, earth moving, providing utilities and other services such as parking facilities, stormwater management and erosion control systems, potable water and wastewater systems, altering land forms, or construction or demolition of a structure on the land.

Stormwater. Runoff from rain, snow or other forms of precipitation, resulting in surface runoff and drainage.

Stormwater system. The system of roadside drainage, roadside curbs and gutters, curb inlets, swales, catch basins, manholes, gutters, ditches, pipes, lakes, ponds, sinkholes, channels, creeks, streams, storm drains, and similar conveyances and facilities, both natural and manmade, located within the city which are designated or used for collecting, storing, or conveying stormwater, or through which stormwater is collected, stored or conveyed, whether owned or operated by the city or other person.

Stream. Includes any linear surface water conveyance recognized by TDEC as Waters of the State, any blue-line shown on the 7.5 min USGS Quad map or any waterbody determined to be a stream by a Tennessee Qualified Hydraulic Professional (TN-QHP).

Swale. A natural or manmade depression or wide shallow ditch used to route or filter runoff.

Upstream. Upgradient of the lowest point of each subwatershed of a development.

Utility, public or private. Any agency which under public franchise or ownership, or under certification of convenience and necessity provides the public with electricity, natural gas, steam, communication, rail transportation, water, sewage collection, or other similar service.

Vegetation. Collection of plant life, including trees, shrubs, bushes, and grass.

Wastes, industrial/commercial. Liquid or other wastes resulting from any process of industry, manufacture, trade or business, or from the development of any natural resources.

Wastes, other. Decayed wood; sawdust; shavings; fallen bark; fallen leaves; lawn clippings; animal wastes; used or previously applied lime; garbage; trash; refuse, loose used paper, paper products, plastic containers, or metal containers; ashes, offal, discarded tar; discarded paint; discarded or uncontained solvents; used, discarded, or spilled petroleum products, antifreeze, motor vehicle fluids; used or discarded tires, gas tanks, or chemicals; or any other used, uncontained, or unpackaged, or disposed of materials which may discharge to or otherwise enter the stormwater system.

(Ord. No. O-139-04, § 1, 8-17-04; Ord. No. O-16-05, § 1, 1-18-05; Ord. No. O-26-2013, § 1, 2-5-13)

Section 22.5-5. Performance and Indemnity Agreement.

In order to ensure that any site development complies with the requirements of this chapter, the engineering director shall have the authority to require a performance and indemnity agreement, together with a letter of credit, a cashier's check, or a surety bond from an approved financial institution or insurance carrier which guarantees satisfactory completion of the project and names the city as beneficiary, and in the case of a lessee, assures the lessee's proper maintenance of stormwater facilities during the term of its lease and the proper removal of water quality facilities by the lessee at the end of the term of its lease. The security shall be provided by the property owner, lessee or

developer in a form and in an amount to be determined by the department of engineering based on submission of plans and actual construction or potential remediation expenses. In addition, a lessee shall pay the city an amount determined by the engineering director, that in no event shall be less than five thousand dollars ($5,000.00), to compensate the city for any perpetual maintenance that may be required after the expiration of the lessee's lease.

(Ord. No. O-139-04, § 1, 8-17-04)

Section 22.5-6. Right of entry.

The engineering director or his designated representatives may enter upon any property which discharges or contributes, or is believed to discharge or contribute, to stormwater runoff or the stormwater system; stream; natural drainage way; or other stormwater system during all reasonable hours to monitor, remove foreign objects or blockages, and to inspect for compliance with the provisions of this chapter.

(Ord. No. O-139-04, § 1, 8-17-04)

Section 22.5-7. Notice of Violation.

Whenever the engineering director or his representative determines that a violation of any provision of this chapter has occurred, or that work does not have a required plan or permit, or that work does not comply with an approved plan or permit, the representative may issue a notice of violation to the property owner, utility, facility operator, lessee, tenant, contractor, permittee, the equipment operator and/or any other person or entity doing work on the site. The notice of violation shall:

(1) Be in writing;
(2) Include a description of the property sufficient for identification of where violation has occurred;
(3) List the violation;
(4) State the action required;
(5) Provide a deadline for compliance or to stop work.

(Ord. No. O-139-04, § 1, 8-17-04)

Section 22.5-8. Penalties.

(a) Any person violating the provisions of this chapter shall be guilty of a misdemeanor and punished as provided in the general provisions of the City Code. Each day that a continuing violation of this chapter is maintained or permitted to remain shall constitute a separate offense.
(b) Any person violating the provisions of this chapter may be assessed a civil penalty by the city of not less than fifty dollars ($50.00) or more than five thousand dollars ($5,000.00) per day for each day of violation. Each day of violation shall constitute a separate violation. The city may also recover all damages proximately caused to the city by such violations. All penalties collected under the provisions of this section shall inure exclusively to the use and benefit of the Engineering Department for remediation projects and educational endeavors associated with stormwater activities.
(c) In assessing a civil penalty, the city may consider:
    (1) The harm done to the public health or the environment;
    (2) Whether the civil penalty imposed will be a substantial economic deterrent to the illegal activity;
    (3) The economic benefit gained by the violator;
    (4) The amount of effort put forth by the violator to remedy this violation;
    (5) Any unusual or extraordinary enforcement costs incurred by the city;
    (6) The amount of penalty established by ordinance or resolution for specific categories of violations; and
    (7) Any equities of the situation that outweigh the benefit of imposing any penalty or damage assessment.

(d) In addition to the civil penalty in subsection (b) above, the city may recover all damages proximately caused by the violator to the city, which may include any reasonable expenses and attorney's fees incurred in investigating, enforcing and/or correcting violations of this chapter.
(e) An expedited order for partial civil penalty assessment may be issued at the time of violation. The amount of the expedited order shall be set by policy for specific categories of violations.
(f) The city may bring legal action to enjoin the continuing violation of this chapter, and the existence of any other remedy, at law or in equity, shall be no defense to any such actions.
(g) The remedies set forth in this section shall be cumulative, not exclusive, and it shall not be a defense to any action, civil or criminal, that one (1) or more of the remedies set forth herein has been sought or granted.

(Ord. No. O-139-04, § 1, 8-17-04; Ord. No. O-166-2011, § 1, 11-29-11; Ord. No. O-26-2013, § 2, 2-5-13)

Section 22.5-9. Board of Environmental Appeals.

(a) There is created a board of environmental appeals (BEA) to hear appeals filed by any person incurring a civil penalty or damage assessment imposed pursuant to this chapter.
(b) The BEA may issue subpoenas requiring attendance of witnesses and production of such evidence as requested, administer oaths, and take testimony as the BEA deems necessary to fulfill its purpose.
(c) The BEA shall be composed of five (5) members appointed by the mayor and confirmed by council.
    (1) The mayor shall select appointees so that the BEA will consist of individuals with an expertise as follows:
        a. One (1) licensed professional engineer with three (3) years of engineering experience as a professional engineer;
        b. One (1) architect, engineer, landscape architect or surveyor with three (3) years of experience;
        c. One (1) representative of the development or industrial community;
        d. One (1) neighborhood representative;
        e. One (1) member at large.
    (2) In addition to the above qualifications a. through e., one (1) of the five (5) members must have at least three (3) years civil engineering experience and a second member must have at least three (3) years civil or environmental engineering experience.
    (3) BEA members shall serve for a term of five (5) years. A BEA member shall continue to serve, however, until a successor has been appointed, or until the BEA member has been reappointed, as the case may be. The terms of the original BEA members shall be staggered so that the term of one (1) member shall expire each year.
    (4) An appointment to succeed a BEA member who is unable to serve said member's full term shall be for the remainder of said member's term.
    (5) BEA members may be reappointed, but they do not succeed themselves automatically.
    (6) BEA members shall serve without compensation.
(d) The BEA shall annually select one (1) of its members to serve as chair and another member to serve as vice-chair of the BEA by a majority vote of all members.
(e) The BEA shall keep complete and accurate records of the proceedings of all their meetings. The department of engineering shall designate a person to serve as secretary to the BEA.
(f) No BEA member shall participate in the appeal of any matter in which the member has a direct personal or financial interest.
(g) Three (3) members of the BEA shall constitute a quorum, and the concurrence of a majority of the BEA present and voting in any matter shall be required for a determination of any matter within its jurisdiction.

(Ord. No. O-139-04, § 1, 8-17-04)

Section 22.5-10. Appeals.

Any person aggrieved by the imposition of a civil penalty or damage assessment as provided by this chapter may appeal said penalty or damage assessment to the board of environmental appeals (BEA).

(1) The appeal shall be in writing and filed with the law department within thirty (30) days after the damage assessment or civil penalty is served in any manner authorized by law.
(2) Upon receipt of an appeal, the BEA shall hold a public hearing within sixty (60) days, or a later date mutually agreed upon by the parties. Ten (10) days prior notice of the time, date, and location of said hearing shall be published in a daily paper of general circulation. Ten (10) days notice shall be provided to the aggrieved party at the address provided at the time of appeal.
(3) Any alleged violator may appeal a decision of the BEA pursuant to the provisions of title 27, chapter 8 of Tennessee Code Annotated.
(4) If a petition for review of such damage assessment or civil penalty is not filed within thirty (30) days after the damage assessment or civil penalty is served in any manner authorized by law, the violator shall be deemed to have consented to the damage assessment or civil penalty, and it shall become final.

(Ord. No. O-139-04, § 1, 8-17-04)

Section 22.5-11. Severability.

Each separate provision of this chapter is deemed independent of all other provisions herein so that if any provision or provisions of this chapter shall be declared invalid, all other provisions thereof shall remain enforceable.

(Ord. No. O-139-04, § 1, 8-17-04)

Sections 22.5-12-17. Reserved.

ARTICLE II. SITE DEVELOPMENT CRITERIA

Section 22.5-18. Purpose.

This article is adopted to improve public safety, to control the rate of flow of stormwater, to minimize increases in the peak flow rates of stormwater runoff caused by site development within the city, to control new site development, to minimize any detrimental effect on water quality by the completed facility, and to avoid such effects during construction.

(Ord. No. O-139-04, § 1, 8-17-04)

Section 22.5-19. Approval of plan required prior to issuance of a building permit.

No building permit shall be issued until the required site development plan and stormwater facilities are approved by the department of engineering, and the portion of the property required for stormwater facilities is recorded as a permanent drainage, water quality, and/or access easement, except that a lessee shall be required to record a drainage, water quality and/or access easement running only through the term of its lease.

(Ord. No. O-139-04, § 1, 8-17-04)

Section 22.5-20. Partial plat process.

(a) In limited situations, the partial plat process may be used to establish easements for stormwater facilities, such as detention and retention basins, water quality devices, access from a public road, storm drain pipes, and open drainage ditches, as an alternative to dedicating easements by recording a subdivision plat.
(b) The partial plat process allows (1) a property owner to create permanent easements, and (2) a lessee to create easements running through the term of its lease, by recording a written legal document in which the easements are shown and defined on attached survey plat and written property

description exhibits. All exhibits shall be prepared on letter or legal-sized paper, certified by a registered land surveyor, and recorded with the county register of deeds. At the discretion of the law director, the written document may be a form document provided by the department of law or may be a document prepared by the property owner's or lessee's attorney and approved by the department of law. Survey plat and property description exhibits shall be approved by the department of engineering.

(c) The partial plat process is not an option in the following situations:
  (1) When any portion of a pre-existing easement would be relocated or abandoned.
  (2) If the law director or engineering director decides, in unforeseen or unusual circumstances, that this process shall not be an option.

(d) The partial plat process is an option for those sites with the following:
  (1) An existing survey plat of the entire property recorded with the county register of deeds.
  (2) A site development plan approved by the department of engineering and showing the proposed easements.
  (3) A legal document, "Covenants by Property Owner for the Permanent Maintenance of Stormwater Facilities" in the case of a property owner, or "Covenants by Lessee for the Maintenance of Stormwater Facilities on Leased Property" in the case of a lessee, approved by the department of engineering and recorded with the county register of deeds.
  (4) A special pollution abatement permit (SPAP) approved by the department of engineering, if one was required.

(Ord. No. O-139-04, § 1, 8-17-04; Ord. No. O-16-05, § 1, 1-18-05)

Section 22.5-21. General design criteria.

(a) The engineering director or his representative has the authority to adopt site development design criteria.

(b) The standard method of drainage computation shall be as set forth in article II, hydrologic and hydraulic computations.

(c) The stormwater system, excluding stormwater detention ponds, water quality control facilities and sinkholes, shall be designed to accommodate a ten-year return frequency twenty-four-hour duration storm, except for those facilities which would flood public roads classified as locals, collectors or arterials. A twenty-five-year storm runoff prevention plan shall be used to prevent flooding of local roads and collectors, and a fifty-year storm runoff prevention plan shall be used to prevent flooding of arterial streets. A one hundred-year design storm shall be used to prevent flooding of all new structures and have no additional adverse impact on existing structures. For site development on blue-line streams included in the flood insurance study, the flood damage protection ordinance O-347-90 (chapter 12 of the City Code) shall govern. All stormwater systems shall be designed to have no additional adverse impact on upstream and adjacent property in the fifty-year storm, unless an adequate permanent drainage easement is obtained.

(d) For drainage generated by areas greater than two hundred (200) acres, the flow for a one hundred-year storm shall be computed. Such flow may exceed the capacity of facilities designed to comply with the requirements of lesser floods as noted in paragraph (c) above, and shall be contained in the public right-of-way or a permanent drainage easement on the property being improved or developed. Pipes and culverts designed for a one hundred-year storm shall be constructed of reinforced concrete if such pipes or culverts lie in public lands or easements.

(e) Material for pipes used for conveyance of stormwater within the city shall be in accordance with the following:
  (1) Cross drains and any other pipe under the pavement surfaces shall be reinforced concrete pipe (RCP). Storm drains within the roadway prism, but not under the pavement, shall also be RCP.
  (2) Any pipe, culvert, or drainage system dedicated to the city, whether inside or outside the right-of-way, shall be constructed of RCP.

(3) RCP is required if the failure of the pipe would cause flooding or potential property damage on adjacent properties. RCP is required for all storm pipes and culverts that carry through water from adjacent properties ("off-site water").
(4) RCP is required for all detention basin outlet structures.
(5) Material for driveway pipes may be RCP, corrugated metal pipe (CMP), or double-walled high-density-polyethylene-pipe (HDPE) as desired by the responsible agency, corporation, or individual. RCP is required underneath any driveways or entrances that are heavily traveled or which would have the potential to flood areas within the public right-of-way or any structure.
(6) Double-walled HDPE pipe and CMP may be used to convey stormwater generated on the particular property ("on-site drainage"), such as parking lots, buildings, etc. Both pipe materials (HDPE and CMP) may be used to convey water under driveways in locations where a pipe is outside of the roadway prism, has adequate cover, and would not cause flooding of adjacent properties or rights-of-way in the event of pipe failure. Installation of all pipe must be done with adequate pipe bedding, backfill material, and coupling bands as recommended by the pipe manufacturer.

(f) Construction fill that alters the conveyance and/or storage capacity of the regulated floodplain is prohibited in the flood fringe in an area bounded by the floodway line and a line defined as one-half (0.5) the linear distance between the floodway line and the one hundred-year floodplain line. This requirement may be waived if a development occurs on a lake/river where regulated by Tennessee Valley Authority and a TVA flowage easement exists or if a drainage study prepared by a registered professional engineer licensed to practice in the state shows a rise of less than one-tenth (0.1) foot on existing properties within one-half (0.5) mile (upstream or downstream) of the proposed development using a method widely accepted among engineering professionals.
(g) When existing or documented flooding problems are present, the engineering director has authority to condition the approval of a permit upon the compliance with additional requirements, including but not limited to detention, conveyance facilities, or other stormwater management solutions required to reduce the adverse impact of the proposed development on other properties or on the subject development.

(Ord. No. O-139-04, § 1, 8-17-04; Ord. No. O-16-05, § 1, 1-18-05; Ord. No. O-26-2013, § 3, 2-5-13)

Section 22.5-22. Site development design manuals.

The Department of Engineering is authorized to adopt additional policies, criteria, specifications, and standards, for the proper implementation of the requirements of this chapter in a Land Development Manual (LDM) and a Best Management Practices (BMP) Manual. The policy, criteria, and requirements of the Land Development Manual dated February 2002, and the Best Management Practices Manual dated March 2001, as amended by the city's department of engineering, shall be enforceable consistent with other provisions of this chapter.

The Department of Engineering is also authorized to adopt the City of Knoxville Qualified Local Program Construction General Permit policy.

(Ord. No. O-139-04, § 1, 8-17-04; Ord. No. O-26-2013, § 4, 2-5-13)

Section 22.5-23. Stormwater detention.

(a) The requirement for stormwater detention ponds shall apply to the following:
(1) All road construction exceeding one-half (½) acre of impervious area;
(2) All commercial, industrial, educational, institutional and recreational developments of one (1) acre or more of disturbed area;
(3) Large single-family or duplex residential developments of five (5) acres or more of disturbed area or five (5) lots or more;
(4) Any site development which contains one-half (½) acre or more of additional impervious area.

(5) Any redevelopment that meets any of the four (4) criteria above.

(b) For areas of redevelopment, if the downstream system (to the second existing road crossing or blue-line stream) is examined and found to be adequate to carry the two- and ten-year twenty-four-hour storms, the requirement for detention for areas of redevelopment may be waived. However, if the examination finds inadequate conveyance for the two- and ten-year twenty-four-hour storms, the engineering director has authority to condition the approval of a permit upon compliance with additional requirements, including but not limited to detention, conveyance facilities, or other stormwater management solutions required to reduce the adverse impact of the proposed development on other properties or on the subject development. The engineer is charged with determining the predeveloped (before any site development had occurred) conditions, including the curve number. If the engineer cannot determine the predeveloped conditions, then a maximum predeveloped curve number of seventy (70) may be used to compute the predeveloped flow and satisfy the requirement. In areas of redevelopment, detention or retention is required for the entire developed site, not just the portion of the site being redeveloped. This does not exempt the developer from providing the first flush and/or water quality requirements.

(c) If in the developer's judgment, stormwater detention is either unwarranted or impractical, hydrologic and hydraulic computations to support such a conclusion and demonstrate that stormwater runoff shall not be increased in peak rate for storm events identified in the design standards for detention ponds in this chapter shall be furnished to the department of engineering for review. This does not exempt the developer from providing the first flush and/or water quality requirements.

(d) Where the development's stormwater discharges directly into a main stream, detention for peak flow attenuations is not required unless deemed necessary by the department of engineering. This does not exempt the developer from providing the first flush and/or water quality requirements.

(e) When existing or documented flooding problems are present, the engineering director has authority to condition the approval of a permit upon the compliance with additional requirements, including but not limited to detention, conveyance facilities, or other stormwater management solutions required to reduce the adverse impact of the proposed development on other properties or on the subject development.

(f) Detention basins located in subdivisions must be located on two (2) or more buildable lots or in a common area with a legally established property owners' organization with responsibility for maintenance and repair of the detention basin.

(Ord. No. O-139-04, § 1, 8-17-04)

Section 22.5-24. Erosion and sediment control.

(a) To comply with state, federal, and local regulations, erosion and sediment control shall be regulated by this article because of the following water quality impacts:

(1) Stormwater runoff can carry pollutants into receiving water bodies, thereby degrading water quality;

(2) The increase in nutrients in stormwater runoff such as phosphorus and nitrogen accelerates eutrophication of receiving waters;

(3) Construction requiring land clearing and the alteration of natural topography tend to increase erosion;

(4) Siltation of water bodies resulting from increased erosion decreases their capacity to hold and transport water, interferes with navigation, and harms flora and fauna;

(5) Substantial economic losses can result from these adverse impacts on community waters.

(b) When site development occurs, the following actions are required:

(1) Install, inspect, repair, and maintain all erosion prevention and sediment controls for any site development;

(2) Install, inspect, repair, and maintain all erosion prevention and sediment controls per the requirements of the approved permits and plans.

(Ord. No. O-139-04, § 1, 8-17-04; Ord. No. O-26-2013, § 5, 2-5-13)

Section 22.5-25. Objectives of erosion and sediment control.

In order to protect, maintain and enhance the immediate and long-term health, safety and general welfare of the citizens of the city, this article has the following objectives:

(1) Control erosion and sedimentation to limit deposition in streams and other water bodies;
(2) Facilitate the removal of pollutants in stormwater runoff to perpetuate the natural biological functions of streams.

(Ord. No. O-139-04, § 1, 8-17-04)

Section 22.5-26. Site development permit required before site development.

No person shall:

(1) Grade, dump, alter natural or existing topography, move or place fill material, excavate, remove any vegetation not exempted by the tree protection ordinance, or begin any site development activities without first obtaining a site development permit from the department of engineering.
(2) Alter any natural or manmade drainage system so as to divert, constrict, increase or change in any manner the natural or existing flow of any stream, or natural or existing drainage of any area without obtaining a site development permit from the department of engineering.
(3) Commence site development and/or construction of any building or structure without obtaining a site development permit from the department of engineering.
(4) Clear any site by means that causes disturbance of soil without first obtaining a site development permit from the department of engineering.
(5) Begin site development on sites equal to or greater than one (1) acre without first obtaining a City of Knoxville Qualified Local Program Construction General Permit.

(Ord. No. O-139-04, § 1, 8-17-04; Ord. No. O-26-2013, § 6, 2-5-13)

Section 22.5-27. Site development permit requirements.

(a) A site development plan shall be required for any site development except when:
    (1) The developed area is used for gardening or agricultural purposes;
    (2) The proposed work does not, in the opinion of the department of engineering, affect the drainage on the site or the quality of stormwater runoff from the site.
(b) Before any residential lot(s) in a platted subdivision may be transferred, the engineer of record must sign and seal a letter stating that all supporting stormwater and street infrastructure and grading has been completed for the subject lot(s), or the development certification may be submitted to and approved by the department of engineering. Failure to comply with this requirement may result in the revocation of the surety bond, cashiers check, or letter of credit and implementation of all available legal remedies. A site development plan shall contain the following:
    (1) The name, address, and telephone number of all persons having a legal interest in the property;
    (2) The tax map number, group, and parcel number of the property or properties affected;
    (3) Information that complies with the requirements of the tree protection ordinance and the city arborist.
(c) Additional information is required for site development plans based on the type of development.
    (1) Small single-family residential development—Requires a topographic map showing the proposed area of land disturbance, the layout of the structure(s), identification of all areas of depression, blue-line streams, easements, and stormwater system, and other information as required by the engineering director.
    (2) Large residential and commercial development—Requires plans showing existing and proposed two-foot contours as they relate to the roadway, parking lot, drainage facilities, cut and fill slopes, all stormwater pipe size, material and location, identification of all areas

of depression, blue-line streams, easements, erosion and sediment control measures, detention pond data including size, location, slope of bottom, outlet, invert, top elevations, spillway size and elevation, and the detention easement and an adequately sized traversable access easement. Also, catch basin location, elevation, slope, swales, ditches, and their stabilization treatment. Building pad contours and building pad elevations are also required when existing elevations are altered by more than four (4) feet. When this site development plan includes a street to be dedicated to the city, a complete set of roadway plans must be submitted including profiles, grades, and cross sections showing cross slope, limits of construction, clear zone, utility strip, greenway/pedestrian space, signage plan, and a street-lighting fixture type and any above ground fixed objects on the right-of-way. All large residential and commercial development plans that are submitted to the department of engineering must meet the following minimum standards:

a. Stamp and signature from appropriate design professional;
b. Legible (for micro-filming and reproducing);
c. Constructible plans;
d. All required hydraulic and hydrologic calculations with reasonable assumptions (including downstream calculations with descriptive numbers, time of concentration, pre- and post-development delineated watersheds, and the city's detention pond design sheet completed);
e. Pre- and post-developed contours;
f. Erosion and sediment control plan;
g. Required retaining wall calculations;
h. Owner's, and, if applicable, lessee's name, address, and phone number;
i. Vicinity map;
j. City block number;
k. CLT number (including map, insert, group and parcel);
l. Certified address from the metropolitan planning commission.

Plans that do not meet these minimum standards will be rejected, and will not be reviewed further until submission standards are met:

(3) Utilities development.

a. Except as provided below in subsection b., requires plans showing the following: The names and addresses of all property owners; the name, address and contact person of the utility; the name, address and contact person of the engineering firm; a vicinity map; a graphical scale; the stamp and signature of a registered professional engineer licensed to practice in the state; total project length in feet; all property lines; existing easements; existing and proposed contours; all water features; all topographic features such as sinkholes; appropriate delineations such as no fill, buffer, floodway and F-1 zone; appropriate construction details and an effective erosion and sediment control plan with details adequate for installation and inspection that complies with the TDEC "Erosion and Sediment Control Handbook," Second Edition dated March 2002, and all subsequent updates thereto, or the city's Best Management Practices Manual (BMP), current as of the date of the submission of the plans.
b. The site development permit requirements for any utility entity currently subject to a court order or decree shall be determined by the department of engineering.

(d) Plans shall be prepared and stamped by an engineer, landscape architect, or architect competent in civil and site design and licensed to practice in the state with the following conditions:

(1) Portions of the site development plan that require hydraulic or hydrology calculations and design must be prepared and stamped by a professional engineer competent in civil and site design and licensed to practice in the state.

(2) All roads and joint permanent easements that are required to be designed and built to public road standards shall be designed and stamped by a professional engineer competent in civil and site design and licensed to practice in the state.

(e) Prior to the release of a bond, a development certification must be completed showing that all roadway lines, grades, cross slopes, locations, contours, elevations, drainage structures or facilities, and detention basin volumes, size, slopes, locations, elevations, and hydraulic structures have been field verified, represent the as-built field conditions, and comply with the approved plans. This certification must be stamped by the appropriate design professional required to stamp the original site development permit as stated in section 22.5-28(d)(3) as well as a registered land surveyor licensed to practice in the state.

(f) When the department of engineering has determined the site development plan is approvable, it will send a letter authorizing the installation of the erosion and sediment control measures. When the erosion and sediment control plan has been implemented on site, the appropriate design professional required to stamp the erosion and sediment control portion of the site development permit will provide a letter to the department of engineering stating that he has inspected the site and the erosion control has been implemented as shown on the approved erosion and sediment control plan. This letter must be signed and sealed by the appropriate design professional. Once this letter is received by the department of engineering, the site development permit can be issued.

(g) The city arborist and the zoning inspector must approve all plans prior to the issuance of a site development permit. The metropolitan planning commission must approve all plans in a planned zone and overlays prior to the issuance of a site development permit.

(h) A registered land surveyor licensed to practice in the state shall prepare and submit a plat for all plans that propose stormwater facilities. The plat shall locate, establish, and define an easement around each facility and traversable access to it. The plat must be approved and recorded with the county register of deeds before a building permit can be issued.

(i) When existing or documented flooding problems are present, the engineering director has authority to condition the approval of a permit upon the compliance with additional requirements, including but not limited to detention, conveyance facilities, or other stormwater management solutions required to reduce the adverse impact of the proposed development on other properties or on the subject development.

(j) An erosion and sediment control plan must be provided as follows:

(1) Small single-family residential development—Requires no erosion and sediment control plan except if the residential development, exclusive of agricultural, gardening, farming, and similar areas of activity, results in disturbance of more than ten thousand (10,000) square feet or except as deemed necessary by the engineering director. When a plan is deemed necessary, the erosion and sediment control must comply with the TDEC Erosion and Sediment Control Handbook, Second Edition, dated March 2002 and all subsequent updates, or the city's Best Management Practices (BMP) Manual current as of the date of the submission of the plans, whichever is more restrictive.

(2) Large residential and commercial development—Requires an erosion and sediment control plan that is stamped by a competent registered professional engineer, architect, or landscape architect licensed to practice in the state and complies with the TDEC Erosion and Sediment Control Handbook, Second Edition, dated March 2002 and all subsequent updates, or the city's Best Management Practices (BMP) Manual current as of the date of the submission of the plans, whichever is more restrictive.

(3) Portions of the erosion and sediment control plan that require hydrology or hydraulic calculations and design shall be prepared and stamped by a competent licensed professional engineer registered in the state.

(k) A surety bond, cashier's check, or letter of credit must be provided as follows:

(1) A performance and indemnity agreement is required prior to the issuance of a site development permit for rough grading or site development when there is a potential for

runoff to adversely impact city rights-of-way and other property, when sites drain into sinkholes, or when the site is used for a borrow pit. The performance and indemnity agreement shall be guaranteed in the form of a cashier's check, a letter of credit, or a surety bond.

(2) A performance and indemnity agreement is required for large residential development when there is a potential for runoff to adversely impact city rights-of-way and other property, when sites drain into sinkholes, when the site is used for a borrow pit, a detention pond is required, or there is construction of a joint permanent easement or public road. The performance and indemnity agreement shall be guaranteed in the form of a cashier's check, a letter of credit, or a surety bond. The actual amount is based on a remediation and completion estimate as determined by the department of engineering, with a minimum amount of fifty thousand dollars ($50,000.00).

(3) A performance and indemnity agreement is required for commercial development when there is a potential for runoff to adversely impact city rights-of-way and other property, when sites drain into sinkholes, when the site is used for a borrow pit, a detention pond is required, or there is construction of a joint permanent easement or public road. The amount is based on the project cost estimate that includes roadway facilities, drainage facilities, and erosion and sediment control remediation. The performance and indemnity agreement shall be guaranteed in the form of a cashier's check, a letter of credit, or a surety bond. The actual amount is based on a remediation and completion estimate as determined by the department of engineering, with a minimum amount of ten thousand dollars ($10,000.00).

(4) A surety bond, cashier's check, or letter of credit is not required for small single-family residential development except when deemed necessary by the engineering director based on site conditions and the adverse impact on downstream conditions or other properties.

(5) The engineering director may refuse brokers or financial institutions the right to provide a surety bond, letter of credit, etc. based on past performance, ratings of the financial institution, or other appropriate sources of reference information.

(Ord. No. O-139-04, § 1, 8-17-04; Ord. No. O-16-05, § 1, 1-18-05; Ord. No. O-045-05, § 1, 2-15-05)

Section 22.5-28. Temporary emergency exemption.

In extreme circumstances when a delay in construction may cause significant property damage or loss of life, the engineering director may grant a temporary exemption from a site development permit. Specific instances may include a sinkhole opening up which threatens homes or personal safety, a failure of a storm system where the flooding could cause property damage or loss of life, etc. This exemption is limited to work specific to resolving the dangerous situation(s). Any approval for work granted under this emergency exemption must be issued in writing and approved by the engineering director. After the emergency has been resolved, a site development permit must be obtained for the emergency work and any additional proposed work. This should be accomplished through the standard review process. This temporary emergency exemption does not provide immunity from any of the design criteria of this ordinance.

(Ord. No. O-139-04, § 1, 8-17-04)

Section 22.5-29. Fees.

(a) The following fees shall be charged for reviewing site development plans and will be required upon the submittal of the plans.

(1) Site development plans for an administrative plat:

(A) Small single-family residential	$ 0.00
(B) Less than one (1) acre:	$ 150.00
(C) One (1) acre to five (5) acres:	$ 150.00 + $ 20.00/acre (acres 1—5)
(D) More than five (5) acres:	$ 250.00 + $ 10.00/acre (acres 6+)
(E) Condominium/apartment developments:	$ 150.00 + $ 5.00/unit

(2) Subdivisions:
(A) One (1) to fifty (50) lots: $ 150.00 + $12.00/lot (lots 1—50)
(B) Fifty-one (51) lots or more: $ 750.00 + $8.00/lot (lots 51+)

(b) The following fees shall be charged for site development permits and will be required before the issuance of the permit.
(1) Site development plans for an administrative plat without a bond:
(A) Small single-family residential: $ 10.00
(B) All other projects: $ 50.00
(2) Site development plans for an administrative plat with a bond:
(A) Projects of less than one (1) acre: $ 350.00
(B) Projects of one (1) acre or more: $ 350.00 + $15.00/acre
(C) Condominium/apartment developments: $ 350.00 + $5.00/unit
(3) Subdivisions:
(A) One (1) to four (4) lots: $ 150.00 + $10.00/lot (lots 1—4)
(B) Five (5) to fifty (50) lots: $ 350.00 + $20.00/lot (lots 1—50)
(C) Fifty-one (51) lots or more: $ 1,350.00 + $5.00/lot (lots 51+)
(4) Utilities (except for utility entities currently subject to a court order or decree, the fees for which shall be determined by the Department of Engineering):
(A) Maintenance: $15.00 per 20 square yards plus $0.50 per each additional square yard.
(B) Construction: $1.00 per linear foot of conduit (pipe, cable, wire, fiber optics, etc.) with a $200.00 minimum.

(c) The fee for a site development permit issued after site development has begun without a permit shall be ten (10) times the standard fee.

(d) A site development permit is valid for one (1) year. A permit may be renewed before it expires at no additional cost. Once a permit expires, the appropriate permitting fee shall be charged for the renewal.

(e) If an individual permit for grading, erosion control, or drainage is requested, the appropriate permitting and review fee will be charged for each permit.

(f) The cost of each special pollution abatement permit shall be one hundred dollars ($100.00), which will cover the entire period of the permit.

(g) The following fees shall be charged for reviewing final plats and will be required before approval of plat:
(1) Administrative plat $80.00
(2) Exempt subdivision and corrected plats 70.00
(3) All other plats:
(A) One (1) to fifty (50) lots 100 + $10.00/lot
(B) Fifty-one (51) or more lots 600 + $6.00/lot (lots 51+)
(4) Partial plat $150.00

(h) Whenever a construction general permit is required, the following fee schedule applies:
(1) Equal to or greater than one (1) acre but less than five (5) acres, two hundred fifty dollars ($250.00).
(2) Equal to or greater than five (5) acres but less than fifty (50) acres, one thousand dollars ($1,000.00).
(3) Equal to or greater than fifty (50) acres but less than one hundred fifty (150) acres, four thousand dollars ($4,000.00).
(4) Equal to or greater than one hundred fifty (150) acres, seven thousand five hundred dollars ($7,500.00).

(i) All fees and charges collected under the provisions of this section shall inure exclusively to the use and benefit of the engineering department for operations associated with stormwater related

activities. The excess of revenues less operating costs may be transferred to the general fund for general operations.

(Ord. No. O-139-04, § 1, 8-17-04; Ord. No. O-16-05, § 1, 1-18-05; Ord. No. O-166-2011, § 2, 11-29-11; Ord. No. O-26-2013, § 7, 2-5-13)

Section 22.5-30. Violation of a site development permit.

No person shall perform site development work that does not conform to an approved site development plan.

(Ord. No. O-139-04, § 1, 8-17-04)

Section 22.5-31. Design standard for detention and/or retention ponds.

(a) The calculated peak flow rate of stormwater runoff resulting from a one-year, two-year, five-year, ten-year, twenty-five-year and one hundred-year return frequency twenty-four-hour duration storm shall be no greater after site development of the site than that which would result from a one-year, two-year, five-year, ten-year, twenty-five-year and one hundred-year return frequency twenty-four-hour duration storm on the same site prior to site development.

(b) Adequate attention must be given to safety and sanitation in the design of any detention facility. This includes, but is not limited to, a minimum of two (2) percent slope in the bottom of all detention ponds, a minimum of 3:1 (H:V) side slopes or with traversable access to the pond's vegetated bottom and side slopes for maintenance, proposed contours should reflect fifteen (15) percent additional area for each two-foot contour of the detention or retention pond based on the appropriately sized pond for the one-, two-, five-, ten-, twenty-five- and one hundred-year storms, a minimum of four thousand five hundred (4,500) cubic feet of storage volume, and a minimum of one (1) foot of freeboard from the highest water surface elevation for the largest required design storm to the top of the berm before the fifteen (15) percent additional volume is added. An exception can be made to the minimum slope requirement in the bottom of the pond if the first flush requirement is not managed in the quantity detention pond and the pond invert is finished in concrete.

(c) The plans shall include sufficient design information to show that the facility will operate as required. This shall include the existing (or before site development) peak flow discharges, the after site development peak flow discharges, and/or volumes of stormwater runoff based on the proposed site development, as well as all necessary computations used to determine the reduced peak flow rates for the design storms. The capacity of the facility shall be sufficient to control the volume of stormwater runoff resulting from one-year, two-year, five-year, ten-year, twenty-five-year and one hundred-year frequency twenty-four-hour duration storms within the peak rate of flow requirements stated in the subsection.

(d) Discharge from the stormwater detention pond shall be routed to a ditch, channel, or stormwater facility of adequate capacity. Calculations showing the capacity of the receiving stormwater facility and its capability to convey a ten-year frequency storm shall be provided. If the receiving stormwater facility is incapable of conveying a ten-year frequency storm, calculations showing the capacity of the receiving stormwater facility and its capability to convey a two-year frequency storm shall also be provided. The above calculations will be routed to the closer of the second existing street crossing or blue-line stream. The engineering director has authority to condition the approval of a permit upon the compliance with additional requirements, including but not limited to correctly sizing and installing offsite conveyance facilities or other stormwater management solutions required to reduce the adverse impact of the proposed development on other properties or the development.

(Ord. No. O-139-04, § 1, 8-17-04; Ord. No. O-16-05, § 1, 1-18-05)

Section 22.5-32. Requirements for developments draining to a sinkhole.

(a) Site development on property that includes a sinkhole will require copies of the appropriate permits from the state department of environment and conservation (TDEC) prior to site development approval. After review of the state permit, the engineering director may require additional information related to structural integrity and flood protection. If the proposed development does not require TDEC approval, a letter from TDEC shall be submitted prior to the issuing of a site development permit, stating that a TDEC permit is not required.

(b) For site development or redevelopment projects requiring attenuation or retention of the one-year, two-year, five-year, ten-year, twenty-five-year and a one hundred-year frequency twenty-four-hour duration storms with sinkholes entirely on site, calculations shall be provided showing that one hundred-year twenty-four-hour design storm will not flood any structures assuming plugged conditions (zero (0) cfs outflow) for the sinkhole. These calculations must include the entire contributing watershed for the sinkhole. An easement is required around the sinkhole to include an area that is a minimum of five (5) feet horizontally outside the highest closed contour.

(c) For site development or redevelopment projects requiring attenuation or retention of the one-year, two-year, five-year, ten-year, twenty-five-year and one hundred-year frequency twenty-four-hour duration storms with sinkholes partially on site, calculations must be provided showing that there will not be a rise in water surface elevations between the one hundred-year predeveloped and the one hundred-year postdeveloped twenty-four-hour design storm assuming plugged conditions (zero (0) cfs outflow) for the sinkhole. An easement is required at a minimum of five (5) feet horizontally outside the highest closed contour on the section of the sinkhole located on the developed property. A rise in the one hundred-year water surface elevation is allowable when no structures will be flooded and all parties with ownership of the sinkhole agree in writing to allow the rise. In this case, an easement is required around the sinkhole to include an area that is a minimum of five (5) feet horizontally outside the highest closed contour.

(d) Stormwater retention is required for site developments that meet the requirements for stormwater attenuation and are located in one of the following critical watersheds:

(1) Ten Mile Creek;
(2) Sinking Creek;
(3) Emily Ave. and Timothy Ave. area;
(4) Harrell Hills watershed (near Cranberry Dr., Clairmont Dr., and Gaines Rd.);
(5) Prosser Road #1 (immediately between north of the railroad crossing and Cherry St.);
(6) Prosser Road #2 (approximately halfway between Knoxville Zoo Dr. and Magnolia Ave.);
(7) Pamela Ln.;
(8) All areas draining to a sinkhole;
(9) Any area of known flooding where deemed necessary by the engineering director.

The retention pond shall be designed so that the overflow in the one-year, two-year, five-year, ten-year, twenty-five-year and one hundred-year design storms must meet the predeveloped discharges in addition to retaining the difference in the predeveloped and postdeveloped one hundred-year design storm. In basins or sub-basins where there is a documented historical draw down time for the sinkhole or region being drained to, it may be acceptable for a detention pond to be used instead of retention. For detention to be approvable, the draw down time of the detention pond must be a minimum of one and one-half (1½) times the draw down time for the region.

(e) When existing or documented flooding problems are present, the engineering director has authority to condition the approval of a permit upon the compliance with additional requirements, including but not limited to detention, conveyance facilities, or other stormwater management solutions required to reduce the adverse impact of the proposed development on other properties or on the subject development.

(Ord. No. O-139-04, § 1, 8-17-04)

Section 22.5-33. Hydrologic and hydraulic computations.

(a) All hydrologic and hydraulic computations utilized in the design of stormwater detention facilities must be prepared by a registered engineer proficient in the field of hydrology and hydraulics and licensed to practice engineering in the state.
(b) The required hydrologic and hydraulic computations shall be in accordance with NRCS (formerly known as the SCS) unit hydrograph procedures using AMC II curve numbers and type II rainfall distribution, or other criteria that the engineering director shall establish based on scientific and engineering information. All post developed conditions must be routed at appropriately small time intervals through the detention pond using either hand calculations or computer models that are widely accepted among engineering professionals. The BMP manual contains accepted methods and procedures. Other methods may be approved by the Engineering Director in the design of curb inlets and small pipe systems when the final result is verified by a SCS method.

(Ord. No. O-139-04, § 1, 8-17-04; Ord. No. O-16-05, § 1, 1-18-05)

Section 22.5-34. Maintenance of stormwater facilities.

(a) Property owners and lessees are responsible for maintaining stormwater and/or water quality facilities located on their property. Prior to the issuance of a site development permit, the property owner shall execute a legal document entitled "Covenants for Permanent Maintenance of Stormwater Facilities," or the lessee shall execute a legal document entitled "Covenants for Maintenance of Stormwater Facilities on Leased Property" ("the Covenants"). The property owner or the lessee, as the case may be, shall record the covenants in the office of the county register of deeds. The location of the facility, the recorded location of the covenants document, and a note stating the property owner's or lessee's responsibility shall be shown on a plat, or in the case of a lessee, as an exhibit attached to the lessee's covenants, that is also recorded in the office of the county register of deeds.
(b) The covenants shall specify minimum maintenance requirements to be performed at necessary intervals by the property owner or lessee, as the case may be.
(c) In order to provide access to stormwater and/or water quality facilities by personnel, vehicles and equipment, the property owner or lessee, as the case may be, will provide a traversable twenty-foot wide access within an easement from a public street in strict accord with the plan and any conditions required by the department of engineering.
(d) The covenants shall grant the city permission to enter the property to inspect any stormwater facility for proper functioning and maintenance. If the facility is not being maintained as required, the city will notify the property owner or lessee, as the case may be, in writing. If property owner or lessee, as the case may be, fails to repair or maintain the facility within the allotted time, the engineering director may authorize the work to be performed by the city or others. In such cases, property owner or lessee, as the case may be, shall reimburse the city for double its direct and related expenses. If the property owner or lessee, as the case may be, fails to reimburse the city, the city is authorized to file a lien for said costs against the property or the lessee's leasehold interest, as the case may be, and to enforce the lien by judicial foreclosure proceedings.
(e) Sediment removal and disposal shall be performed in accordance with all local, state, and federal laws. Guidelines for sediment removal and disposal are given in the city's LDM. The engineering director may stipulate additional guidelines if deemed necessary for public safety.

(Ord. No. O-139-04, § 1, 8-17-04; Ord. No. O-16-05, § 1, 1-18-05)

Section 22.5-35. Acceptance of streets and stormwater systems within public rights-of-way.

No street or stormwater system shall be dedicated to the city for public use or maintained by the city as a public street, until said street and stormwater facility have been accepted in writing by the engineering director. The engineering director shall only approve streets constructed according to the current version of "A Policy on Geometric Design of Highways and Streets," published by the American Association of State Highway and Transportation Officials, and designed by a registered professional engineer licensed to practice in the state. The design speed for local streets in residential subdivisions

shall be a minimum of thirty (30) miles per hour, unless the engineering director deems a different design speed appropriate. Additionally, stormwater systems and streets must conform to the city standard specifications and the city construction standards.

(Ord. No. O-139-04, § 1, 8-17-04)

Section 22.5-36. First flush requirements for detention ponds.

(a) The requirements of this article shall not apply to those developments built or approved before the passage of this article.

(b) All requirements of sections 22.5-20 through 22.5-35 shall apply to this article.

(c) All stormwater detention ponds that are required under section 22.5-23 and which are approved after the adoption of this article shall be built to improve first flush water quality by using the best management practices outlined in this section. The standard management method shall be to collect the first flush or the first four thousand five hundred (4,500) cubic feet, whichever is greater, of stormwater runoff in a pond and release that runoff over a minimum twenty-four-hour and a maximum of a seventy-two-hour period. The engineering director may approve other methods of improving first flush water quality if valid documentation from full-scale testing by an independent third party is provided indicating that a higher or equal level of water quality will result from the alternate method.

(Ord. No. O-139-04, § 1, 8-17-04)

Section 22.5-37. Technical requirements for special pollution abatement permits.

Technical requirements for the permit shall be based on the current Best Management Practices Manual subject to the approval of the department of engineering.

(1) Specific land uses are known to produce pollutants that are detrimental to water quality and would not be corrected by the standard methods outlined in the preceding section. A special pollution abatement permit is required to ensure that structural and management best management practices are used to control water quality for these uses. Before the approval of structural stormwater treatment devices, the engineering director may require valid documentation from full-scale testing by an independent third party to verify that the pollutants of concern will be properly controlled. A special pollution abatement permit will be valid for a period of five (5) years, at which point it must be renewed. At the time of renewal, any deficiency in the management method must be corrected. Any development that occurs without a required permit shall be a violation of this chapter of the code.

(2) A special pollution abatement permit shall be required for the following land uses:

a. Vehicle, truck or equipment maintenance, fueling, washing or storage areas including but not limited to: automotive dealerships, automotive repair shops, and car wash facilities;

b. Any property containing more than four hundred (400) parking spaces, or one hundred twenty thousand (120,000) square feet of impervious parking area;

c. Recycling and/or salvage yard facilities;

d. Restaurants, grocery stores, and other food service facilities;

e. Commercial facilities with outside animal housing areas including animal shelters, fish hatcheries, kennels, livestock stables, veterinary clinics, or zoos;

f. Other producers of pollutants identified by the engineering director by information provided to or collected by him or his representatives, or reasonably deduced or estimated by him or his representatives from engineering or scientific study.

(Ord. No. O-139-04, § 1, 8-17-04)

Section 22.5-38. Additional permits required.

(a) Where a national pollutant discharge elimination system (NPDES) permit has been issued for NPDES regulated stormwater discharges from a facility, no local permit will be required for those

NPDES regulated stormwater discharges from the facility for which such permit has been issued and remains in effect. For site development, both a TDEC construction site NPDES permit and a city site development permit are required.

(b) Additional permits may be required from various state and federal agencies before a site development permit will be issued by the city.

(Ord. No. O-139-04, § 1, 8-17-04)

Section 22.5-39. NPDES permits.

(a) Any person who holds an individual national pollutant discharge elimination system (NPDES) permit shall provide a copy of such permit to the engineering director no later than sixty (60) calendar days after issuance or renewal of the permit. The permit holder shall also provide copies of all discharge monitoring reports required by the permit for any discharge to the stormwater system.

(b) Any person who holds an NPDES general permit and/or multi-sector permit (as distinct and different from an individual permit) shall provide either a copy of such permit or the permit number assigned to them by the state department of environment and conservation to the engineering director no later than sixty (60) calendar days after issuance of the permit.

(Ord. No. O-139-04, § 1, 8-17-04)

Section 22.5-40 Riparian buffer zone.

(a) Definition; purpose. Riparian buffer zones (RBZ) exist within and adjacent to regulated waters (waters). The city regulates the RBZ to comply with federal mandates, protect stream water quality, and to reduce flood insurance rates.

(b) Delineation. The RBZ is measured from the top of bank, extending perpendicular from each bank for the length of the water body. The top of bank is the uppermost limit of the active channel, typically indicated by a change in bank slope from steep to gentle slope. If the top of bank cannot be determined from the above indicator or if there is a dispute in the determination, the top of bank can be determined by submitting approved engineering calculations that determine the width of the stream resulting from the two-year frequency storm. The width of the RBZ will vary, depending on all of the following criteria:

(1) If a floodway profile, as part of the flood insurance study, has been adopted for the waters, the RBZ width must be equal to or greater than the width of the floodway at all points.

(2) Waters with a drainage area of less than one (1) square mile will require a minimum RBZ width of thirty (30) feet.

(3) Waters with a drainage area of one (1) square mile or more will require a minimum RBZ width of sixty (60) feet. The sixty-foot width of the RBZ can be established on an average width basis for a project, as long as the minimum width of the RBZ is more than thirty (30) feet at any measured location. If RBZ averaging is used, a plat must be recorded showing the limits of the RBZ.

(4) Waters that are contained within a culvert do not require an RBZ. This exception does not apply to proposed roadway or proposed driveway crossing waters.

(5) RBZ widths apply where culverts are removed from waters.

(6) The engineering director may approve alternate RBZ widths for special circumstances (e.g., existing land uses or existing physical conditions) that preclude the above requirements.

(7) If mitigating an RBZ off-site, the RBZ must be shown on a recorded plat.

(c) Use of RBZ areas.

(1) Acceptable uses of the RBZ may include: yards, picnic areas, walking trails, greenways, landscaped areas, wildlife habitat, primitive areas, roadway and sidewalk stream crossings, or other similar uses approved by the director.

(2) Specifically prohibited uses include, but are not limited to: parking lots, dumpster storage, material storage, grease-bin storage, vehicle storage/maintenance, animal lots or kennels, or other uses known to contribute pollutants to waterways.

(d) Protection during site development.

(1) It is prohibited to disturb an RBZ except when restoring the stream or stream banks, creating or restoring the RBZ or when removing/eradicating invasive vegetation or replanting with native vegetation.

(2) All slopes adjacent to waters shall be left in a stabilized condition upon completion of the project. No actively eroding, bare or unstable banks shall remain unless TDEC has determined there is no better alternative (e.g. detrimental to endangered species). Placement of riprap and other hard armor is only allowed when bioengineering alternatives are not technologically feasible.

(e) Allowable disturbances.

(1) The engineering director may allow new driveways, road crossings, or foundations and columns across or through an RBZ on a case-by-case basis. It must be demonstrated that the encroachment is necessary, and that the RBZ will not be impacted excessively. In these cases, the driveway, road crossing, or foundation and columns shall be constructed with careful attention to protecting trees and vegetation, and minimizing site grading.

(2) Approved mitigation is required for removal, encroachment or disturbances to the RBZ.

(3) Utility crossings.

a. Utilities within the RBZ are not exempt from RBZ requirements or mitigation.

b. All utilities within the RBZ must be subsurface or overhead.

c. Planting plans must be consistent with guidelines in the land development manual.

(4) Installing a new or replacing an existing culvert, pipe or bridge across waters.

a. Maintain a natural stream bottom to the maximum extent practicable.

b. Culverts, pipes and bridges must span the baseflow channel.

c. Minimize the length of culverts, pipes and bridges.

d. All crossings must be as close to perpendicular to the flow path as possible.

(f) Enhancements. RBZ enhancement may be required when an RBZ has excessive invasive vegetation and/or if it contains significant areas of unhealthy, diseased or dead vegetation. Information on RBZ enhancements can be found in the land development manual.

(Ord. No. O-26-2013, § 8, 2-5-13)

Sections 22.5-41-49. Reserved.

ARTICLE III. Illicit Connections and Illegal Dumping

Section 22.5-50. Findings of fact.

The city council finds that the uncontrolled discharge of pollutants to the stormwater system has an adverse impact upon the water quality of the receiving waters.

(1) The 1987 amendments to the Federal Water Pollution Control Act, commonly known as the Clean Water Act, established the national pollutant discharge elimination system (NPDES) program, which requires permits for discharges from stormwater systems into waters of the United States. The environmental protection agency has promulgated regulations implementing the NPDES program.

(2) The NPDES regulations for stormwater discharges require certain municipalities, including the city, to:

a. Control through ordinance, permit, contract, order or similar means, the contribution of pollutants to municipal stormwater systems by stormwater discharges associated with industrial activity and the quality of stormwater discharged from sites of industrial activity;

b. Prohibit through ordinance, order or similar means, illicit discharges to the stormwater system;
c. Control through ordinance, order or similar means, discharges to the stormwater system of spills, dumping or disposal of materials other than stormwater;
d. Require compliance with conditions in ordinances, permits, contracts or orders; and
e. Carry out all inspections, surveillance, and monitoring procedures necessary to determine compliance and noncompliance with permit conditions, including the prohibition of illicit discharges to the stormwater system.

(Ord. No. O-139-04, § 1, 8-17-04)

Section 22.5-51. Objectives.

This chapter is adopted as part of the city stormwater management program in order to prevent certain non-stormwater discharges to, and improper disposal of substances in, the stormwater system, as to reduce, to the maximum extent practicable, pollutants that may be present in discharges from the stormwater system.

(Ord. No. O-139-04, § 1, 8-17-04)

Section 22.5-52. Prohibitions.

(a) No person shall:
(1) Connect, or allow to be connected, any sanitary sewer to the stormwater system, including any sanitary sewer connected to the stormwater system as of the date of adoption of this chapter.
(2) Cause or allow an illicit discharge to the stormwater system, or any component thereof, or onto driveways, sidewalks, parking lots, sinkholes, creek banks, or other areas draining to the stormwater system. Illicit discharges include, but are not limited to:
a. Sewage discharges or overflows, including sanitary sewer overflows (SSOs);
b. Discharges of wash water resulting from the hosing or cleaning of gas stations, auto repair garages, or other types of automotive services facilities;
c. Discharges resulting from the cleaning, repair, or maintenance of any type of equipment, machinery, or facility including motor vehicles, cement-related equipment, and port-a-potty servicing, etc.;
d. Discharges of wash water from mobile operations such as mobile automobile washing, steam cleaning, power washing, and carpet cleaning, etc.;
e. Discharges of wash water from the cleaning or hosing of impervious surfaces in industrial and commercial areas including parking lots, streets, sidewalks, driveways, patios, plazas, work yards, and outdoor eating or drinking areas, etc.;
f. Discharges of runoff from material storage areas containing chemicals, fuels, grease, oil, or other hazardous materials;
g. Discharges of pool or fountain water containing chlorine, biocides, or other chemicals; discharges of pool or fountain filter backwash water;
h. Discharges of sediment, or construction-related wastes, etc.;
i. Discharges of food-related wastes (e.g., grease, fish processing, and restaurant kitchen mat and trash bin wash water, etc.).

(b) Subject to the provisions of subsection (c), the following discharges shall not be in violation of this chapter:
(1) Water line flushing;
(2) Landscape irrigation;
(3) Diverted stream flows or rising groundwater;
(4) Infiltration of uncontaminated groundwater (as defined at 40 CFR 35.2005(20)) to separate storm drains;
(5) Pumping of uncontaminated groundwater;

(6) Discharges from potable water sources, foundation drains, uncontaminated air conditioning condensation, irrigation waters, springs, water from crawl space pumps, or footing drains;
(7) Lawn watering;
(8) Individual noncommercial car washing on residential properties; or car washing of less than two (2) consecutive days in duration for a charity, nonprofit fund raising, or similar noncommercial purpose;
(9) Flows from riparian habitats and wetlands;
(10) Dechlorinated swimming pool discharges;
(11) Incidental street wash water from street cleaning equipment designed for cleaning paved surfaces and limiting waste discharges;
(12) Street deicing for public safety;
(13) Any activity authorized by a valid NPDES permit; and
(14) Any flows resulting from firefighting.

(c) If the engineering director finds that any activity, including but not limited to any of the activities listed in subsection (b) above, are found to cause or may cause sewage, industrial wastes or other wastes to be discharged into the stormwater system, the engineering director shall so notify the person performing such activities, and shall order that such activities be stopped or conducted in such a manner as to avoid the discharge of sewage, industrial wastes or other wastes into the stormwater system. The engineering director may require a stormwater pollution prevention plan to insure that the activity can be conducted without causing further discharge of pollution to the stormwater system.

(Ord. No. O-139-04, § 1, 8-17-04; Ord. No. O-16-05, § 1, 1-18-05)

Section 22.5-53. Notification of spills and illicit discharges.

As soon as any person has knowledge of any illicit spills or discharges to the stormwater system in violation of this chapter, such person shall immediately notify the engineering director by telephone of this discharge. If such person is directly or indirectly responsible for such discharge or responsible for the operation of the system or business, then such person shall also take immediate action to ensure the containment and cleanup of such discharge and shall confirm such telephone notification with a written report to the engineering director within three (3) calendar days. At a minimum, the written report for any illicit discharge shall include:

(1) Date and time of the discharge;
(2) Location of the discharge;
(3) Material or substance discharged;
(4) Duration and rate of flow;
(5) Total volume discharged;
(6) Total volume recovered;
(7) Cause or reason for the discharge;
(8) Remediation and containment action taken;
(9) Material Safety Data Sheets (MSDS) for the discharged material;
(10) Action taken to prevent further discharges;
(11) Description of any environmental impact;

(Ord. No. O-139-04, § 1, 8-17-04)

Section 22.5-54. Requirements for monitoring.

The engineering director may require any person engaging in any activity or owning any property, building or facility (including but not limited to a site of industrial activity) to undertake such reasonable monitoring of any discharge(s) to the stormwater system operated by the city and to furnish periodic detailed reports of such discharges.

(Ord. No. O-139-04, § 1, 8-17-04)

Sections 22.5-55-60. Reserved.

Chapter 23
Streets and Sidewalks

- *Charter reference— Authority to lay out, open, etc., streets and other improvements, § 206.*
- *Cross reference— Aircraft and airports, Ch. 3; animals, Ch. 5; buildings and building regulations, Ch. 6; cable television regulations, Ch. 7; civil emergencies, Ch. 9; flood damage prevention and control, Ch. 12; horticulture, Ch. 14; ambulance service, § 16-61 et seq.; markets and pedestrian vendors, § 16-316 et seq.; motor vehicles and traffic, Ch. 17; offenses, Ch. 19; parks and recreation, Ch. 20; public transportation, Ch. 21; railroads, Ch. 22.*
- *State Law reference— Streets and other public improvements, T.C.A. § 7-31-101 et seq.*

ARTICLE I. In General

Section 23-1. Definitions.
Section 23-2. Obstructions—Prohibited; exceptions.
Section 23-3. Same—Removal of unlawful obstructions.
Section 23-4. Same—Public safety; lights.
Section 23-5. Sale of merchandise on street or sidewalk.
Section 23-6. Storage or display of goods.
Section 23-7. Cleaning of sidewalks.
Section 23-8. Removal of ice, snow, mud, etc., from sidewalks.
Section 23-9. Discharge of roof water on sidewalk.
Section 23-10. Making fire on street.
Section 23-11. Slaking or burning lime, cement or similar material on street.
Section 23-12. Construction of cellar doors.
Section 23-13. Leaving cellar doors open or out of repair.
Section 23-14. Obstruction of streetlights by shade trees.
Section 23-15. Walking or driving on grass plot or park strip.
Section 23-16. Curb stops.
Section 23-17. Failure to obtain franchise for use of streets.
Sections. 23-18—23-40. Reserved.

ARTICLE II. Construction and Repair of Sidewalks and Driveways

Section 23-41. Responsibility for construction.
Section 23-42. Responsibility for repairs.
Section 23-43. Permit; lines and grades.
Section 23-44. Bond.
Section 23-45. Storage of materials and equipment; public safety.
Section 23-46. Special construction.
Section 23-47. Specifications for sidewalks.
Section 23-48. Specifications for driveways.
Section 23-49. Specifications for curbs.
Section 23-50. Specifications for gutters.
Sections. 23-51—23-70. Reserved.

ARTICLE III. Construction Within or Interfering With Right-Of-Way

Section 23-71. Permit required; emergency exception.
Section 23-72. Permit cancellation.
Section 23-73. Revocation of permit.
Section 23-74. Bond; certificate of insurance.
Section 23-75. Inspection fees.
Section 23-76. Responsibility for repair of street, sidewalk, or right-of-way.
Section 23-77. Supervision of work.
Section 23-78. Public safety and traffic control.
Section 23-79. Use of sheeting and braces.
Section 23-80. Work in public right-of-way.
Section 23-81. Utility connections to be installed prior to paving the street.
Section 23-82. Protective barriers for work in sidewalks or right-of-way.
Section 23-83. Annual maintenance permit.
Sections. 23-84—23-105. Reserved.

ARTICLE IV. Street Naming and Addressing

Section 23-106. Assignment of street names, property addresses.
Section 23-107. Sections established.
Section 23-108. Street designation.
Section 23-109. House and building address procedure.
Section 23-110. Buildings required to have number.
Section 23-111. Street names.
Section 23-112. Street signs.
Section 23-113. Appeals.
Section 23-114. Enforcement.

ARTICLE I. IN GENERAL

Section 23-1. Definitions.

The following words, terms and phrases, when used in this chapter, shall have the meanings ascribed to them in this section, except where the context clearly indicates a different meaning:

Curb means that construction parallel to and adjoining the edge of the paving or roadway surface of the street definitely marking the limits of that portion of the street to be used by vehicular traffic.

Director means the person holding the position of director of public service in the government of the city, or his duly authorized representative.

Driveway means that portion of the street lying between the curbline of the street and the property line of the street used for ingress and egress to property adjoining a street, by vehicles.

Gutter means that construction adjoining the curb and forming a part of the street surface used by vehicles and whose primary function is to provide surface drainage along the street.

Sidewalk means that portion of the street generally reserved for pedestrians' use. Unless otherwise permitted, it shall be laid so that the property side of the walk shall be parallel to and identical with the property line of the street.

Specification means the standard specifications and plans for construction procedures and materials on file in the office of the city engineer, and their subsequent revisions.

Street means all public thoroughfares within the corporate limits of the city, such as alleys, avenues, highways, boulevards, streets and the like, and shall include all that portion of the public way from property line to property line dedicated to the public use, and includes sidewalks, driveways, grass plots, curbs and that portion of the street used by vehicles.

(Code 1962, § 36-1)

Section 23-2. Obstructions—Prohibited; exceptions.

If any person shall place upon any public street of the city, or cause to be placed thereon, any rocks, lumber, wood, rubbish or other encumbrance, or other obstruction whatever, he shall be guilty of a misdemeanor; provided that, for the purpose of erecting, finishing or repairing any building within the city, a contractor, upon obtaining a permit therefor from the director of public service, shall have the privilege of depositing on the squares, streets, lanes or alleys opposite or adjacent to the building any lumber, brick or other material necessary to be used in erecting, finishing or repairing the building. Such materials shall not hinder or impede the necessary passage of pedestrians and vehicles, nor the free passage of water in the gutters of the streets; the materials shall not remain longer than is absolutely necessary for the completion of the work being done; and all rubbish from the building shall be removed as soon as possible. This section shall not apply to any obstruction permitted by law.

(Code 1962, § 36-55)

Section 23-3. Same—Removal of unlawful obstructions.

Should any rocks, wood, lumber or other obstruction whatever be found upon any of the pavements, sidewalks, squares or streets of the city, where such obstruction is not permitted by the provisions of section 23-2, the director of public service shall request the person allowing, making or suffering such obstruction to remove the obstruction without delay, and if the obstruction is not removed by the offender it shall be the duty of the director to remove the obstruction, and the person offending shall be liable, in addition to the penalties fixed in section 1-9, to pay to the city double the expense of removing the obstruction.

(Code 1962, § 36-56)

Section 23-4. Same—Public safety; lights.

When any person shall place or cause to be placed any kind of building material or other obstruction in or upon any street of the city, he shall see to it that such material is not left in condition to endanger any person passing along the street, and shall put up, at or near the obstruction, a red signal light during the darkness of each and every night the obstruction continues. If such obstruction is more than fifty (50) feet in length there shall be an additional light for every fifty (50) feet or fraction thereof.

(Code 1962, § 36-57)

Section 23-5. Sale of merchandise on street or sidewalk.

It shall be unlawful for any person to sell or offer for sale on the streets and sidewalks, or in doorways or entrances to vacant buildings when the occupancy of the doorway or entrance interferes with travel upon the sidewalk adjacent thereto, any merchandise of any kind or character; provided that the provisions of this section shall not apply to sales regulated by chapter 16, article X of this Code.

(Code 1962, § 36-58)

Section 23-6. Storage or display of goods.

It shall be unlawful to use any part of any public street between the curbline and property line or between the curbline and outermost street line for the storage of goods, merchandise or other material, or for the purpose of displaying goods or articles for sale or barter, except as provided in chapter 16, article X.

(Code 1962, § 36-59)

Section 23-7. Cleaning of sidewalks.

All owners or occupants of property in front of which paved sidewalks have been laid or abutting upon paved sidewalks are hereby required to keep such sidewalks clean. All persons and others required to keep sidewalks clean where such sidewalks are within the first fire district of the city and are swept or otherwise cleaned and the sweepings placed in the street shall sweep and clean the sidewalks between the hours of 6:00 p.m. and midnight and at no other time. If any person within the first fire district of the city who is required by this section to keep sidewalks clean desires to and does sweep or clean the sidewalk between the hours of midnight and 6:00 p.m., all sweepings shall be gathered and placed in a garbage can and disposed of as other garbage.

(Code 1962, § 36-60)

Section 23-8. Removal of ice, snow, mud, etc., from sidewalks.

It shall be the duty of every person occupying any dwelling house or other house upon any street of the city, or owner thereof if the house is unoccupied, to remove or cause to be removed from the sidewalks in front of or upon the sides of his premises all ice, snow or mud, grass, weeds and other foreign substances which may accumulate thereon, and it shall be the duty of every police officer to enforce this section.

(Code 1962, § 36-62)

Section 23-9. Discharge of roof water on sidewalk.

It shall be unlawful for any owner or occupant of a house situated upon any of the streets to have any water spout or gutter attached to such building which shall be so constructed as to empty its contents upon the public sidewalk, and all such water spouts emptying their contents on the alleys shall not be of greater height than four (4) inches from the ground, and all such as are of greater height from the ground are hereby declared to be public nuisances. It shall be the duty of all persons owning property within the city, whose buildings are provided with water spouts emptying their contents upon the

public sidewalks, to abate such nuisance by the construction of drainpipes beneath the surface of the sidewalks, which shall make connection with all such water spouts for the purpose of conveying the water into the gutter.

(Code 1962, § 36-63)

Section 23-10. Making fire on street.

(a) It is hereby declared to be a misdemeanor for any person to make any fire or burn any trash, leaves, wood, coal, oil, gasoline or similar combustible material upon any of the paved streets or other public thoroughfares of the city; provided, however, that contractors and other workmen may construct necessary fires for melting tar or similar material where the surface of the street under such fires is first amply protected by depositing a sufficient thickness of earth on the surface so as to prevent injury to the street. Such workmen or contractors shall first obtain a written permit for the construction of such fire from the director of public service.

(b) As used in this section, "paved streets of the city" means any of the streets paved with brick, asphalt, bitulithic, concrete, wood block, stone block, tar macadam, granitoid or other similar improved paving material in common use in paving the city's streets.

(Code 1962, § 36-64)

Section 23-11. Slaking or burning lime, cement or similar material on street.

It shall be unlawful and a misdemeanor for any person to slake or burn any lime, cement or similar material which thereby generates heat upon any of the unprotected paved streets of the city in such way or manner as to be calculated to damage or injure the street by the application of heat thereto.

(Code 1962, § 36-65)

Section 23-12. Construction of cellar doors.

All cellar doors upon any of the streets, parks or squares of the city shall be built of strong material and be uniform and flush with the pavement or sidewalk, and shall not project from the wall of the building more than five (5) feet. Within the first fire district, all such doors shall be of noncombustible material.

(Code 1962, § 36-66)

Section 23-13. Leaving cellar doors open or out of repair.

If any owner of a house in the city shall permit his cellar door, on any square, lane, alley, pavement or sidewalk of the city, to remain open, except when in actual use, or shall have it so insecure or weak or out of repair as to render walking thereon or over the door unsafe or dangerous, such person so offending shall be punished as provided in section 1-9. In case the owner or occupant of any house does not, on notice, attend to the repairs of any cellar door, the door may be repaired by the director of public service, at the expense of the owner, which may be recovered before any court having jurisdiction, with costs.

(Code 1962, § 36-67)

Section 23-14. Obstruction of streetlights by shade trees.

(a) Prohibited. It shall be unlawful for the owner of any property abutting upon any of the streets within the corporate limits of the city to permit the branches of any shade trees upon his property, or the sidewalk in front thereof, to so extend across the street as to obstruct the shining of any electric light in the street placed there by the corporate authorities or under their direction.

(b) Notice to trim trees. If any person shall permit branches of his shade trees to extend on the street and obstruct the electric lights on the street, it shall be the duty of the director of public service to cause to be served upon such property owner a ten-day notice requiring him to trim his trees so that the light may freely shine without obstruction upon the thoroughfare in front of his property.

(c) Failure to comply with notice. If the person owning trees shall fail or refuse so to trim his trees by the time fixed in the notice prescribed by subsection (b) of this section, he shall be guilty of a violation of subsections (a) and (b) of this section.

(Code 1962, §§ 36-68—36-70)

Section 23-15. Walking or driving on grass plot or park strip.

(a) The term "grass plot or park strip," as used in this section, means:

(1) Where there is a sidewalk pavement on the side of a street or public way, the space between such sidewalk pavement and the property line, and the space between such sidewalk pavement and the curb pavement, or, if there is no curb pavement, the space between the sidewalk pavement and the improved or traveled portion of the street or public way, all such references being to the side of the street or public way upon which the sidewalk pavement is located.

(2) Where there is no sidewalk pavement on the side of a street or public way, the space between the property line and the improved or generally traveled portion of such street or public way of the side upon which there is no sidewalk pavement.

(b) It shall be unlawful to walk or drive on, over or across any grass plot or park strip except where landings have been provided in front of property or other improved crossings have been provided over such grass plot or park strip.

(Code 1962, §§ 36-71, 36-72)

Section 23-16. Curb stops.

Whenever a parking lot is ten (10) feet or closer to any property line, a physical barrier or curb stop shall be provided to prevent encroachment of any portion of a parked vehicle over the property line.

(Code 1962, § 36-73)

Section 23-17. Failure to obtain franchise for use of streets.

It shall be unlawful for any person to operate and conduct any kind of business within the corporate limits of the city which requires a franchise, grant or easement over its streets, without first obtaining such franchise, grant or easement. Any person engaged in operating or conducting such a business without having first obtained a franchise, grant or easement shall be guilty of a misdemeanor.

(Code 1962, § 28-1002)

Section 23-18. Authority to establish regulations for mobile food vending establishments.

The mayor or the mayor's designated representative is hereby authorized to make and promulgate rules and regulations for the operation of mobile food vending establishments, including rules and regulations regarding licensing, fees and the use of city rights-of-way.

(Ord. No. O-223-2013, § 1, 11-26-13)

Section 23-19. Complete streets policy.

The city, through its mayor's office and in collaboration with other applicable departments, shall adopt a complete streets policy committing the city, to the maximum extent practical, plan for, design, construct, maintain, and operate all streets to reflect complete streets principles and provide for a comprehensive and integrated street network that accommodates all users and modes. The complete streets policy may be updated from time to time, as needed, in the discretion of the mayor's office or other applicable designated departments, provided that such changes are subject to public hearing and that the public is allowed to submit comments before proposed changes are finalized.

(Ord. No. O-204-2014, § 1, 10-28-14)

Sections. 23-20—23-40. - Reserved.

ARTICLE II. CONSTRUCTION AND REPAIR OF SIDEWALKS AND DRIVEWAYS

Section 23-41. Responsibility for construction.

(a) It shall be the duty of the abutting property owner, or his agent, of any house or property, to construct sidewalks or driveways adjoining his property, and if the abutting property owner or his agent fails to construct sidewalks or driveways adjoining his property, the director of public service shall cause written notice to be given such property owner or agent requiring him to construct such sidewalks or driveways, after the council has, by proper resolution, determined that the construction of the sidewalks or driveways is necessary for the public convenience and safety.

(b) If such property owner or agent shall fail or refuse to construct the sidewalk or driveway within fifteen (15) days from the giving of such written notice, the director shall construct such sidewalk or driveway, and the cost of such construction shall be paid by the city and the amount so paid shall be a lien against the abutting property and may be enforced in the chancery court of the county or any other court of competent jurisdiction.

(Code 1962, § 36-5)

Section 23-42. Responsibility for repairs.

It shall be the duty of the abutting property owner, or his agent, of any house or property, to maintain and repair sidewalks or driveways adjoining his property, and if an abutting property owner or his agent fails to repair or maintain the sidewalk or driveway adjoining his property the director shall notify the owner, and if the repairs are not completed within ten (10) days the director shall cause the necessary repairs to be made and the cost of such repairs shall be a lien against the abutting property and may be enforced in the chancery court of the county or any other court of competent jurisdiction.

(Code 1962, § 36-6)

Section 23-43. Permit; lines and grades.

(a) No person shall construct any sidewalk, driveway, curb or gutter, or change or repair any sidewalk, driveway, curb or gutter on the streets of the city without having first received a permit from the director of public service for the work, authorizing such construction, and received the necessary lines and grades from the office of the city engineer.

(b) Such permits shall be issued by the director of public service at charges set out under section 23-75 in order to provide for inspectors on the work.

(Code 1962, § 36-7)

Cross reference— Licenses and miscellaneous business regulations, Ch. 16.

Section 23-44. Bond.

No person shall be granted a permit for the construction of any sidewalk, driveway, curb or gutter, or repairs to any sidewalk, driveway, curb or gutter without first having on file with the recorder of the city, in a form prescribed by the director of law, an indemnity bond in the amount of two thousand five hundred dollars ($2,500.00) protecting the city from any and all claims for damages to person or property arising out of or incident to the prosecution of the work, whether caused from negligence or otherwise.

(Code 1962, § 36-8)

Section 23-45. Storage of materials and equipment; public safety.

(a) Generally. The director of public service shall specify the portion of the street that may be used for storage of materials and equipment, necessary safety precautions to be observed and other precautions to be taken in prosecuting the work of construction or repair of any sidewalk, driveway, curb or gutter. All materials, equipment, barricades and the like shall be properly marked by red lanterns or flares from sunset to sunrise, and properly marked with suitable

markers clearly distinguishable by the public during daylight hours. When so directed, the person obtaining the permit shall add additional lights or markers. He shall also carry out the work in a safe and workmanlike manner with due caution for the safety of the public at all times, and shall be subject to the instructions of the director to attain this safety.

(b) Use of street. No materials or equipment shall be piled or placed in gutters, over sewer inlets, in front of crosswalks, or within ten (10) feet of any fireplug, and no more than one-half of the street shall be occupied in the prosecution of the work of constructing or repairing any sidewalk, driveway, curb or gutter. Sufficient and safe walkways for ingress and egress to the premises in front of which the work is being carried on shall be provided at all times.

(c) Use of gutter or sidewalk. No construction, barricades, temporary driveways, etc., shall be placed in the gutter or on the sidewalk, except as may be permitted by the building code of the city and authorized by the director of public service.

(Code 1962, §§ 36-9—36-11)

Section 23-46. Special construction.

(a) Approval. Wherever any special construction is required in the sidewalk space, such as chute covers, openings, special vault lights or any other construction, either in or under the sidewalk space, the construction shall be approved by the director of public service both as to material and method of construction, the approval to be written on the permit for the work.

(b) Bond. Whenever such special construction referred to in subsection (a) of this section is authorized, the property owner for whom such construction is authorized shall furnish a surety bond in suitable amount and form as directed by the director of law of the city, protecting the city against any and all damages incident to or arising out of the special construction authorized under subsection (a) of this section.

(Code 1962, §§ 36-12, 36-13)

Section 23-47. Specifications for sidewalks.

All sidewalks laid within the corporate limits of the city shall be composed of standard portland cement, sand and stone in the proportion prescribed by the standard specifications on file in the office of the director of public service or city engineer. All materials and methods of mixing and placing shall conform to the standard specifications and plans for concrete sidewalks on file in the office of the director of public service or city engineer. Sidewalks shall be laid on a cinder base of two-inch thickness, when compacted, shall be four (4) inches in thickness and five (5) feet wide, unless otherwise prescribed by the director, and shall be laid to the lines and grades established by the director of public service and subject to his inspection and approval.

(Code 1962, § 36-14)

Section 23-48. Specifications for driveways.

Driveways laid within the corporate limits of the city shall be composed of standard portland cement, sand and stone, in the proportion prescribed by the standard specifications on file in the office of the director of public service or city engineer. All materials and methods of mixing and placing shall conform to the standard specifications and plans for concrete driveways on file in the office of the director of public service or city engineer. Driveways shall be six (6) inches thick and of a width prescribed by the director of public service, who shall determine the necessary width and have full authority to set the maximum width required. Driveways shall be laid to the lines and grades established by the director and subject to his inspection and approval.

(Code 1962, § 36-15)

Section 23-49. Specifications for curbs.

All curbs laid in the corporate limits of the city shall be composed of standard portland cement, sand and stone in the proportion prescribed by the standard specifications on file in the office of the

director of public service or city engineer. All materials, methods of mixing and placing shall conform to the standard specifications and plans for concrete curbs or granite curbs on file in the office of the director of public service or city engineer. Curbs shall be either standard six-inch by fourteen-inch curb or six-inch by eighteen-inch curb, as determined by conditions, and the size shall be prescribed by the director of public service. They shall be laid to the lines and grades as established by the director and subject to his approval and inspection.

(Code 1962, § 36-16)

Section 23-50. Specifications for gutters.

All gutters shall be composed of standard portland cement, sand and stone, in the proportion prescribed by the standard specifications on file in the office of the city engineer. All materials and methods of mixing and placing shall conform to the standard specifications and plans for concrete gutters on file in the office of the city engineer. Gutters shall be six (6) inches thick and either eighteen (18) inches, twenty-four (24) inches, thirty (30) inches or thirty-six (36) inches in width as prescribed by the director of public service. They shall be laid to the lines and grades as established by the director and subject to his inspection and approval.

(Code 1962, § 36-17)

Sections. 23-51—23-70. Reserved.

ARTICLE III. CONSTRUCTION WITHIN OR INTERFERING WITH RIGHT-OF-WAY

Editor's note— Ord. No. O-15-00, § 1, adopted January 25, 2000, has been treated by the editor as amending the Code by repealing former art. III, §§ 23-71—23-83, and adding a new art. III, §§ 23-71—23-83, to read as herein set out. Former art. III pertained to excavations, and derived from the Code of 1962, §§ 36-25—36-37; Ord. No. O-419-91, adopted October 1, 1991; Ord. No. O-420-91, adopted October 1, 1991; and Ord. No. O-396-99, adopted September 21, 1999.

Section 23-71. Permit required; emergency exception.

(a) It shall be unlawful for any person to make an opening in any street, to disturb in any way the surface or subsurface of any street, or to perform any construction within the right-of-way, or to perform any work so closely adjacent as to create a hazardous roadway condition, or to restrict pedestrian or vehicle flow within the right-of-way without having first received a right-of-way permit and/or temporary traffic control permit therefor from the department of engineering.
(b) All applications for mains, conduits, manholes and other subsurface structures shall be accompanied by a construction plan and typical cross sections showing as nearly as possible the existing underground structures and the location of the proposed structure.
(c) A copy of the permit and the approved traffic control plan must be maintained at the work site at all times during construction. Upon request, it shall be available for inspection by the city.
(d) Where, because of a leak, break, failure or other hazardous condition in a utility distribution or collection system, or other emergency, the public safety requires immediate action, the work may proceed without a permit. In such a situation, the permit shall be obtained as soon as possible thereafter.
(e) A person who begins work within the right-of-way or performs any work so closely adjacent as to create a hazardous roadway condition, or to restrict pedestrian or vehicle flow within the right-of-way without having first received a right-of-way permit and/or temporary traffic control permit, shall be charged a double fee for said permits. This shall not apply to emergency situations.

(Ord. No. O-15-00, § 1, 1-25-00)
Cross reference— Licenses and miscellaneous business regulations, Ch. 16.

Section 23-72. Permit cancellation.

If a permit has been issued and the work has not been started or has not been completed within the time allowed by the permit, the work cannot proceed until the permit is extended or a new permit is secured. If an extension or new permit is not obtained, the department of engineering may cancel the permit.

(Ord. No. O-15-00, § 1, 1-25-00)

Section 23-73. Revocation of permit.

The issuance of a permit will be based upon the approved plans, and no work which changes the alignment or methods of construction from the approved plans shall be performed unless and until revised plans have been submitted to and approved by the department of engineering. The department of engineering may revoke a permit for failure to comply with the terms of the approved traffic control plan or construction plan or for any violation of this article.

(Ord. No. O-15-00, § 1, 1-25-00)

Section 23-74. Bond; certificate of insurance.

When permits are requested to disturb, excavate, obstruct, or perform any construction within or interfering with the right-of-way, the department of engineering may require such applicant to provide a bond or certificate of insurance with good and sufficient sureties, conditioned to secure the city and third parties against all loss, damage or injury of any kind which may result by reason of such work.

(Ord. No. O-15-00, § 1, 1-25-00)

Section 23-75. Inspection fees.

(a) Where the contractor or other governmental agency makes its own restoration, or the operation is of unusual size or difficulty, the department of engineering may assign an inspector to ensure that street openings or street restoration comply with city, department of engineering standards and specifications. In such cases, the permittee shall deposit with the city the estimated amount of such inspection charges in advance and in accordance with the following fee schedule:

Classification	Minimum 20 Sq. Yds. Or Less	Exceeding 20 Sq. Yds. Minimum Plus Following Rate per Square Yard
Pavement or sidewalks	$ 15.00	$ 0.50
Earth or gravel	5.00	0.15

(b) The minimum charge for the issuance of any permit shall be five dollars ($5.00).

(Ord. No. O-15-00, § 1, 1-25-00)

Section 23-76. Responsibility for repair of street, sidewalk, or right-of-way.

(a) Where any street, sidewalk or right-of-way is damaged or disturbed by any person, said person shall restore the street, sidewalk, or right-of-way to the condition that existed before the excavation began.

(b) In all cases where work is done in and upon the streets, sidewalks, or right-of-way, the person doing the work and the person for whom it is done will be held responsible for any subsequent settling of the ground or other disrepair.

(c) Whenever notified by the department of engineering that such street, sidewalk, or right-of-way where an area was excavated or on account of the work done, is hazardous to the public and requires emergency repair, the person responsible therefor shall immediately cause said area to be repaired. In all other situations, the repair work must be commenced within ten (10) days or within a longer time as approved by the department of engineering.

(d) If after said notification above, the person responsible fails to make the necessary repairs within the time specified by the department of engineering, said person shall be guilty of a separate

offense and violation of this section, and shall be punished as provided in section 1-9. The department of engineering may further make such necessary and proper repairs at the cost and expense of the person doing such work or having such work done, or for whose benefit such work is done, or at the cost and expense of each of such persons or all of such persons, jointly and severally.

(Ord. No. O-15-00, § 1, 1-25-00)

Section 23-77. Supervision of work.

All excavation and construction within the right-of-way, for any purpose shall be done under the regulation, review and approval of the department of engineering.

(Ord. No. O-15-00, § 1, 1-25-00)

Section 23-78. Public safety and traffic control.

(a) A permittee under this article shall carry on the work authorized by the permit in such manner as to cause a minimum of interference with traffic.

(b) A permittee shall provide adequate signs and devices to warn and guide traffic, and shall place the signs and devices in a position of maximum effectiveness. The most recent edition of the Manual on Uniform Traffic Control Devices shall be used for the design, installation and maintenance of any traffic control devices. The permittee shall provide and deploy all traffic control devices as prescribed in the approved traffic control plan.

(c) Where difficult or potentially hazardous conditions exist, the permittee shall provide a competent flagger in compliance with the most recent edition of the Manual on Uniform Traffic Control Devices to effect the safe and orderly movement of traffic. Where insufficient traffic lanes exist because of street opening, adequate bridging shall be supplied by the permittee.

(d) When traffic congestion occurs in spite of all precautions and when the permittee or his agent or employee has notice of the congestion, either actual notice or notice from the department of engineering or the police department, the permittee shall request police department assistance immediately. Failure of the permittee to request such assistance will constitute a violation of this article and will be grounds for revocation of the permit. The permittee shall be responsible for such police assistance at rates determined by the city.

(e) When construction is required that will block one (1) or more lanes of a principal collector or arterial roadway, the hours of work shall be limited on weekdays to avoid conflict with peak traffic movement. Work on weekdays is permitted only during the following times: 1) before 6:00 a.m., 2) from 9:00 a.m. to 3:00 p.m., and 3) after 6:30 p.m. Additional work hours may be permitted on a case by case basis. Work is permitted on weekends except for unusual circumstances, such as parades and University of Tennessee football games, etc., as determined by the department of engineering.

(f) When proposed construction will block one (1) or more lanes of a secondary collector or a local roadway, the department of engineering will review the temporary traffic control plans on a case-by-case basis to determine when work is permitted.

(g) In case of an emergency occurring in any roadway, the permittee must notify the police and the fire departments immediately.

(Ord. No. O-15-00, § 1, 1-25-00)

Section 23-79. Use of sheeting and braces.

Whenever the sides of trenches dug in the streets will not stand perpendicularly, sheeting and braces must be used to prevent unnecessary caving.

(Ord. No. O-15-00, § 1, 1-25-00)

Section 23-80. Work in public right-of-way.

All work within the right-of-way shall comply with the utility maintenance and construction policy, standard detail for trench cut repair, and policy on work zone traffic control prepared by the department of engineering.

(Ord. No. O-15-00, § 1, 1-25-00)

Section 23-81. Utility connections to be installed prior to paving the street.

Where utility connections have not been made in any improvement district, under the abutting property law, utility connections shall be laid to the property line of the abutting owner before the paving on the street is done by the paving contractor. The department of engineering, through the proper officer, shall notify the owner to have such connections made where necessary and at the time necessary. Upon failure of the owner to have such connections made to the property line as provided in this section, it shall be done by the department of engineering at the expense of the abutting owner in order that such street paving may not be torn up unnecessarily after the street has been paved.

(Ord. No. O-15-00, § 1, 1-25-00)

Section 23-82. Protective barriers for work in sidewalks or right-of-way.

Any person leaving a hole or excavation in the sidewalk or right-of-way unprotected by a barrier, guard or other reasonable protection against the dangers thereof, whether caused by the taking out or putting in of a grating, tree, pole, or from any other cause which leaves the sidewalk or right-of-way in an unsafe condition for pedestrians, shall be guilty of a misdemeanor.

(Ord. No. O-15-00, § 1, 1-25-00)

Section 23-83. Annual maintenance permit.

The director of engineering is authorized to create an annual permit for the repair and maintenance of existing utility facilities located in the right-of-way and to develop the necessary regulations to administer such permit.

(Ord. No. O-15-00, § 1, 1-25-00)

Sections. 23-84—23-105. Reserved.

ARTICLE IV. STREET NAMING AND ADDRESSING

Section 23-106. Assignment of street names, property addresses.

The Knoxville/Knox County Metropolitan Planning Commission shall develop and maintain street names and property addressing. This agency shall maintain a file of existing public and private street names and be responsible for ensuring that proposed street names and addresses are in conformance with this article and do not create duplications. Street names and addresses shall be adopted by the city, provided, however, that the city may modify such names and addresses as it, in its wisdom, deems appropriate.

(Code 1962, § 36-48; Ord. No. O-280-90, § 2, 9-18-90)

Section 23-107. Sections established.

The city and county shall be divided into four (4) sections by the following streets and rights-of-way:

(1) North/south line formed by Heiskell Road, Central Avenue Pike, Gay Street, Blount Avenue and Chapman Highway;
(2) East/west line formed by Asheville Highway, Martin Luther King Avenue, Jackson Avenue, Gay Street, Southern Railway and Kingston Pike.

The system shall start at the intersection of Central Street and Jackson Avenue going to the four (4) general points of the compass, north, south, east and west. Continuous street names which

cross over these designated lines shall carry the appropriate directional prefix, in addition to the proper street name. All official street names shall include the geographic quadrant suffix.

(Code 1962, § 36-45; Ord. No. O-280-90, § 3, 9-18-90)

Section 23-108. Street designation.

The following street designation guidelines shall apply to street names, street signs and addresses:

(1) All public streets generally extending easterly/westerly shall be designated drives or avenues.
(2) All public streets generally extending northerly/southerly shall be designated streets or roads.
(3) Deadend public streets which cannot be extended shall be designated lanes.
(4) Private easements serving six (6) or more dwelling units shall be designated ways.
(5) Other designations such as boulevard, pike, circle, etc., may be requested for consideration by application to the metropolitan planning commission (MPC). The MPC shall consider such request in their monthly public meetings and approve or deny the request after consideration of the public interest.

(Code 1962, § 36-46; Ord. No. O-280-90, § 4, 9-18-90)

Section 23-109. House and building address procedure.

(a) The MPC addressing department shall designate the number of each lot or building within the city.
(b) Buildings on the south and east sides of streets or easements shall receive even numbers. Buildings on the north and west sides of streets or easements shall receive odd numbers. Numbers shall be assigned every twenty-five (25) feet progressively outward from the base lines of the community. Except as otherwise provided by special ordinance of the city council, the numbering in all cases shall begin with the figures "100" and progress consecutively for the first block, and the second block shall begin with the figures "200," the third block shall begin with the figures "300," and so on until the limits of the city are reached.
(c) Multiple principal structures on a lot shall receive a unique number or letter for each structure. Multiple occupants of a principal structure may be assigned multiple numbers across the linear frontage of structures or a unique number or letter for each occupant in addition to and distinct from the structure's designation.

(Code 1962, §§ 36-46, 36-47; Ord. No. O-280-90, § 5, 9-18-90; Ord. No. O-458-92, § 1, 10-27-92)

Section 23-110. Buildings required to have number.

It shall be the duty of the owners, occupants or lessees of all dwellings, apartment houses, hotels, commercial establishments and other buildings to number such buildings with numerals not less than three and one-half (3½) inches in height and/or of such contrasting color and so located as to be readily visible from the street in daylight or when a light is shined upon them at night. Where such buildings have access to an alley, the numbers shall also be posted on the rear of the building, subject to the same requirements, so as to be easily seen from the alley. The owners, occupants or lessees shall number such dwellings, apartment houses, hotels, commercial establishments and other buildings in accordance with the provisions of this article within sixty (60) days from September 18, 1990.

(Code 1962, § 36-49; Ord. No. O-280-90, § 6, 9-18-90)

Section 23-111. Street names.

(a) All proposed names for public streets and private easements shall be reviewed and approved by the MPC addressing department. Approved street names may be reserved for a maximum of eighteen (18) months before being formally recorded.
(b) Extensions of existing streets, including extensions across intersecting streets, shall use the same name as the existing street, provided, however, that local streets which cross major collector or arterial streets may change names if approved after formal consideration by the MPC.

(c) Street name duplications, including phonetic duplications within Knoxville/Knox County, are prohibited. Existing duplications shall be identified and a procedure initiated for changing the name of the street duplications which is less disruptive to the community.
(d) All initiated street name changes shall be formally acted upon and become effective, if approved, within eighteen (18) months of September 18, 1990.

(Ord. No. O-280-90, § 7, 9-18-90)

Section 23-112. Street signs.

(a) All public streets and private easements serving six (6) or more dwelling units shall be signed at intersections. Signs shall be built in compliance with the latest edition of "The Manual on Uniform Traffic Control Devices for Streets and Highways."
(b) Street signs shall be provided within three (3) months of public access to the facility. Any repair or replacement of street signs on publicly dedicated right-of-way shall be the responsibility of the city.
(c) All street and road signs in the city shall display street names, any required prefix letter designations, the 100 block number and geographic quadrant letter designation.

(Ord. No. O-280-90, § 8, 9-18-90)

Section 23-113. Appeals.

(a) Anyone aggrieved by the enforcement of this article may appeal the decision of the MPC staff to the MPC.
(b) Any person, firm or corporation aggrieved by any decision of the MPC may appeal to the city council to consider the same. All appeals shall be filed at the MPC office within fifteen (15) days of the date of the decision being appealed.

(Ord. No. O-280-90, § 9, 9-18-90; Ord. No. O-211-00, § 1, 5-30-00)

Section 23-114. Enforcement.

(a) Enforcement of this article shall be accomplished through the MPC subdivision regulations and city and county administrative departments. A proper address shall be required for any permit issuance.
(b) Any person, firm, association or corporation who violates, disobeys, omits, neglects or refuses to comply with this article shall be guilty of a misdemeanor and subject to the penalties provided for such an offense.

(Ord. No. O-280-90, § 10, 9-18-90)

Appendix C
Stormwater Engineering Division Policies

		Pages
Policy 01:	**Access Control for Traffic and Driveways**	**18**
Policy 02:	**Covenants for Permanent Maintenance of Stormwater Facilities (CPMSF)**	**6**
Policy 03:	**Creek Restoration and Channel Maintenance**	**1**
Policy 04:	**Drainage Easements**	**1**
Policy 05:	**Easements for Stormwater Control and Water Quality Facilities**	**3**
Policy 06:	**Maintenance Access for Stormwater Management Facilities**	**1**
Policy 07:	**Maintenance Responsibility for Stormwater Drainage Systems**	**3**
Policy 08:	**Partial Plats**	**4**
Policy 09:	**Performance and Indemnity Agreements (Bonds)**	**6**
Policy 10:	**Retaining Walls**	**2**
Policy 11:	**Sediment Disposal for Detention Basin Maintenance**	**2**
Policy 12:	**Sinkhole Development**	**4**
(Policy 13)	***(Withdrawn May 2004)* (Sixty-Day Letter)**	**---**
Policy 14:	**Stormwater Enforcement Guidelines**	**2**
Policy 15:	**Stormwater Message for Curb Irons and Manhole Lids**	**1**
Policy 16:	**Stormwater Pipe Materials**	**1**
Policy 17:	**Survey Control System Requirements**	**2**
Policy 18:	**Underground Stormwater Facility Maintenance**	**2**
Policy 19:	**Underground Stormwater Facility Recordkeeping and Reporting**	**1**
Policy 20:	**No-Rise Certification for Floodway Encroachment**	**5**
Policy 21:	**No-Fill Line**	**5**
Policy 22:	**Stream Buffer Zone (Restricted-Use)**	**2**
Policy 23:	**List of Studied Streams**	**3**
Policy 24:	**Appealed Concept or Use-On-Review Plan**	**1**
Policy 25:	**Post-Construction Water Quality Control for Proprietary Flow-Through Best**	**5**
Policy 26:	**Utility Construction and Maintenance**	**120**
Policy 27:	**Qualified Local Program Construction General Permit**	**45**

An additional document, the Work Zone Traffic Control Policy, is not included in this appendix. It is maintained by the Civil Engineering Section as the City of Knoxville standard specification TS-34, and is also available by accessing the Civil Engineering Section webpage.

Policy 01

ACCESS CONTROL FOR TRAFFIC AND DRIVEWAYS

Section 1 Introduction

1.1 Purpose of Policy
1.2 Definitions
1.3 Property access limited to driveway

Section 2 Right-of-way construction permit

2.1 Permit required
2.2 Application for permit
2.3 Driveway agreement
2.4 Approval and display of right-of-way construction permit

Section 3 Specifications

3.1 Number and location of driveways
3.2 Width of driveways
3.3 Nonconformance of driveways
3.4 Miscellaneous driveway requirements
3.5 Construction specifications
3.6 Major traffic generators
3.7 High volume drive-through facilities

Section 4 Design Schematics

Figure 1 Example of Single-Family Residential Driveway
Figure 2 Example of Multi-Family Residential Driveway
Figure 3 Example of Single Driveway (Commercial property)
Figure 4 Example of Double Driveway (Commercial property)
Figure 5 Example of Gasoline Station - Double Driveway
Figure 6 Example of Ramp Type Driveway
Figure 7 Example of Street Type Driveway
Figure 8 Example of Driveway Types (Ramp, Radius, Street)

SECTION 1 INTRODUCTION

1.1 PURPOSE OF POLICY

The efficiency and safety of a street or highway depends largely upon the amount and character of any interference with vehicles moving along the street. This interference may come from vehicle movements in opposing directions or the same direction, but normally the major interferences are that of vehicles entering, leaving, or crossing the street.

Commercial developments, industrial facilities, and multi-family residential developments are major traffic generators which significantly affect the efficiency and safety of a street or highway. In order to protect the traveling public and fully utilize the potential of streets and highways, it is necessary to regulate vehicle movements entering and leaving roadside developments, thus reducing interference with the traffic stream. In contrast to the necessity by local government to regulate access, the landowner has a legal right to adequate ingress and egress to the land.

The Director of Engineering and his representatives (i.e., the Engineering Department) have the responsibility to make the movement and handling of traffic more effective and efficient. Part of that responsibility involves resolving the conflicting interests of both landowners and road users in the critical area of driveway locations and operations. In many cases the Inspections Bureau reviews and approves driveway locations and design parameters on behalf of the Engineering Department. Therefore, this policy has been established to meet the following objectives:

- To provide maximum protection and safety to the general public through the orderly control of traffic entering and leaving the street or roadway
- To provide a uniform policy for the design and review of driveways throughout the city of Knoxville.
- To ensure that construction methods and field decisions will be acceptable to the city of Knoxville.

Through the uniform enforcement of this policy, the needs and rights of both landowners and the traveling public will be satisfied with respect to the critical area of driveway location, design, and operation. The extent to which this policy is enforced on existing property uses will be based on the relative values of the existing and proposed improvements. Existing lots of record prior to the original publication of this policy (January 1980) may be reviewed on an individual basis, when compliance with this policy represents an unusual hardship. Lots recorded after publication of this policy are expected to comply fully with all provisions of this policy.

1.2 DEFINITIONS

Apron — That portion of the driveway extending from the edge of pavement to the sidewalk section, or right-of-way line if no sidewalk exists, and lying between the side slopes of the driveway.

Corner Clearance — The distance measured along the street right-of-way line from the intersection of street right-of-way lines to the nearest edge of driveway.

Curb Return — The curved portion of a curb at street intersections, or the curved portion of a curb in the side slopes of a driveway.

Curb Transition — A change in the vertical dimension of a curb over a distance as required to develop a full curb from a drop curb.

Driveway — The improved area between a public street and private property intended to provide ingress and egress of vehicular traffic from the public street or thoroughfare to a definite area of private property. Driveways are typically categorized into three types (radius, ramp, street) and three types of properties (multi-family, nonresidential, single-family).

Driveway Angle — The acute angle between the driveway centerline and the centerline of the street. Shown as dimension Y on Figures 1 through 5.

Drop Curb	A curb section with a reduced vertical dimension to allow vehicular ingress and egress, obtained by cutting a section of existing curb or by new construction of a standard ramp driveway.
Easement	The right to use another person's property for a limited and specifically named purpose, as recorded in legal documents and property records. The landowner continues to control the property in all other respects.
Edge Clearance	The distance measured along the street right-of-way line from an interior property line to the nearest edge of driveway. Shown as dimension E on Figures 1 through 5.
Right-Of-Way	The lands conveyed or dedicated to the public to be used for a street, alley, walkway, drainage facility, or other public purpose.
Sidewalk	The area on public or private property where pedestrians walk or stand, generally parallel to the edge of the street, roadway or curb. Sidewalks are generally paved.
Sidewalk Section	The portion of the driveway apron which is an extension of the adjacent sidewalks.
Street	Any public thoroughfare, primarily used by motor vehicles, with a designed section that is not classified as an alley.
Traffic Control Devices	All signs, signals, markings and structures that are placed on, over, or adjacent to a traveled way to regulate, warn or guide traffic. Traffic control devices must conform to the Manual on Uniform Traffic Control Devices and supplement regulations issued by the Tennessee Department of Transportation.

==========

Driveway Properties:

Driveway, Multi-Family	A driveway providing vehicular ingress and egress for property that is used for multi-family residential purposes.
Driveway, Nonresidential	A driveway providing vehicular ingress and egress to property that is used for commercial, industrial, educational or other non-residential purposes.
Driveway, Single-Family	A driveway providing vehicular ingress and egress for property used for single-family residential purposes (usually a single lot of record).

Driveway Types (see Figure 8 for examples):

Driveway, Radius	A driveway constructed with a tapered radius curb transition and a fully developed pavement section from the tangent section of the driveway to the tangent section of the street.
Driveway, Ramp	A driveway constructed with a drop curb transition and paved with concrete from the back of sidewalk (or the property line where no sidewalk exists) to the edge of pavement along the street.
Driveway, Street	A driveway constructed similar in appearance to a street intersection, with fully developed curb returns and pavement sections, lane use markings, channelized lane usage, queue storage for waiting vehicles, etc.

1.3 PROPERTY ACCESS LIMITED TO DRIVEWAY

In order to restrict ingress and egress to the approved driveway, an appropriate curb section or curb and gutter section will be required along the edge of public roadways on a line and grade that must be approved by the Engineering Department. The general requirements are:

1) Curb and gutter
   (a) All roadways classified as arterials on the Major Road Plan
   (b) All roadways classified as collectors on the Major Road Plan
2) Curb and gutter, or detached curb
   (a) All roadways classified as local and that serve land uses other than single-family residential development (RD, CD, OD)
3) Curb and gutter, or detached curb, or extruded curb
   (a) All roadways classified as local and that serve single-family residential development (SFR)

Additional requirements or exceptions to the stated policy may be necessary to ensure that new curbs, gutters, sidewalks and grass areas are consistent with adjacent development or plans for future development. All parking areas shall be constructed and properly curbed so that traffic movements to park and unpark will take place within the property lines.

SECTION 2 RIGHT-OF-WAY CONSTRUCTION PERMIT

2.1 PERMIT REQUIRED

No driveway shall be constructed, nor shall any existing driveway be relocated, altered, or reconstructed on any public right-of-way, except under a permit issued by the appropriate authority. Tennessee Department of Transportation (TDOT) can issue permits for a right-of-way under state jurisdiction, such as a federal or state route. The Knoxville Engineering Department can issue permits for any other right-of-way, which is considered to be under city jurisdiction. All improvements constructed on public right-of-way within the city limits must conform to this policy.

All driveways to be constructed or reconstructed on city right-of-way shall be reviewed and approved by the Engineering Department prior to issuance of a right-of-way permit. In general, a right-of-way permit will not be issued prior to a site development permit or a building permit. A right-of-way permit will not be issued for a vacant parcel of property without a proposed development plan. The Engineering Department may require reasonable proof that a proposed development plan will be implemented, prior to consideration and review of a right-of-way permit for a vacant parcel of property. A right-of-way permit will not be considered or issued for a parcel of property which is not constructable due to topography, building and zoning restrictions, unusual size or shape of property, or other factors which would not allow parking and/or internal traffic circulation on the property.

2.2 APPLICATION FOR PERMIT

An application form for a right-of-way construction permit is included in Appendix A of the Land Development Manual. Include a brief explanation of the proposed usage of property with the application. Submit three copies of a prepared site plan drawing on standard 24" x 36" size paper, unless the right-of-way permit is for a single driveway for a residential development (RD) project, for which a 8 1/2" x 11" sketch will be sufficient.

The site plan drawing must show parking layout, buildings, vertical and horizontal alignment of driveway, sight distances if applicable, drainage and typical driveway cross-section. Include exact location and dimensions of the proposed driveway with reference to the property boundary. Additional requirements typically include property lines, nearest intersecting streets and alleys, utility poles, fire hydrants, traffic signs, traffic signals, pavement markings, parking meters, and bus stops. A site plan drawing shall be at a minimum scale of 1" = 30' in order to clearly show all features. If the plan drawing would exceed 24" x 36" at this scale, the developer may either use multiple drawings or could potentially use 1" = 50' supplemented with detailed drawings of critical areas.

The Stormwater Engineering Division (or in some cases the Inspections Bureau) will review the application in order to determine acceptability of design and the conformance with regulations and design standards. In addition, copies of the right-of-way application will be circulated to other city agencies as necessary to ensure that all driveways are shown correctly on other site development drawings. The Stormwater Engineering Division will notify the permit contact whether permit approval has been granted and any deficiencies noted, which may also include suggested improvements or alternatives based upon knowledge of local standards, neighborhood preferences, physical factors or other conditions.

Approval of the proposed driveway locations and geometric design shall be secured from the Stormwater Engineering Division prior to the issuance of a site development permit or a building permit, except for residential property (single-family houses or duplexes) fronting on local or collector streets. A permit for reconstruction or replacement of any existing driveway, in its current location, may be requested by submitting a right-of-way application to the Civil Engineering Division.

2.3 DRIVEWAY AGREEMENT

A driveway agreement may be necessary in rare cases involving large or complex projects with multi-family housing or commercial developments. The driveway agreement will include the approved right-of-way drawings of the proposed driveways, all exceptions and restrictions imposed on the driveways, methods of construction, maintenance responsibilities, and other conditions as necessary. If the right-of-way permit includes the alteration of through traffic lanes or the addition of a traffic lane, the driveway agreement shall also include a construction plan for the alteration, amount and method of payment for the construction, bond provisions, and a further description of safety and maintenance responsibilities.

A driveway agreement shall be signed by the owner, developer, other interested parties and a representative of the Engineering Department. The driveway agreement shall be binding upon the owner and developer, their successors, any renter or leasee, and upon the City of Knoxville. The driveway agreement also becomes part of the right-of-way permit.

2.4 APPROVAL AND DISPLAY OF RIGHT-OF-WAY CONSTRUCTION PERMIT

When an approved right-of-way permit is granted by the Stormwater Engineering Division or the Inspections Bureau, the supervisor at the construction site shall keep the permit available for inspection at the worksite. The right-of-way construction permit shall be made immediately available to city inspectors upon request. If work is not performed to the requirements of the authorized permit standards, the City of Knoxville may immediately issue a notice to stop work. The site supervisor is also required to produce any TDOT right-of-way permit upon request, so that a city inspector may also review driveway plans and construction of a driveway that connects to state right-of-way.

SECTION 3 SPECIFICATIONS

3.1 NUMBER AND LOCATION OF DRIVEWAYS

In order to provide ease and convenience of ingress and egress to private property, the number and location of driveways shall be regulated relative to the development density of the property being served and the amount of lot frontage. The number and location of driveways is regulated in order to provide the maximum safety with the least interference to the traffic flow on public streets. The maximum number of driveways is shown in Table 3-1 based upon lot frontage:

Table 3-1
Maximum Number of Driveways

Lot Frontage	Maximum Number of Driveways	
< 75 feet	1	
75 feet to 149 feet	1	A, B
150 feet to 299 feet	2	B
300 feet to 599 feet	3	B
(each additional 300 feet)	(+ 1 more)	B

(A) Single-family houses, gasoline service stations, or drivethrough Establishments may have two driveways if separated by a Distance equal to the width of the widest driveway.

(B) Or as determined by the Knoxville Engineering Department.

All driveways shall be subject to the following controls, unless appeal is made to the Stormwater Engineering Division upon sound engineering judgment:

- No driveway shall be constructed within the radius return of a street intersection.
- No driveway shall be constructed with a corner clearance of less than 25 feet.
- No driveway shall be constructed in a manner which results in the encroachment of a curb return or curb radius beyond the extension of an adjacent property line or lease line, except where joint use with the adjacent property is established.
- Property adjoining more than one street with adequate frontage for a driveway entrance shall be encouraged to locate primary access on the street with lower traffic volumes.
- The minimum length of tangent curbs between curb cuts on the same property must equal or exceed 20% of the widest adjacent curb cut.
- Except for R-1 zoning districts, no driveway may be constructed opposite the non-continuous leg of a "T" intersection for a distance equal to the width of the non-continuous leg right-of-way plus 25 feet in each direction.

3.2 WIDTH OF DRIVEWAYS

The width of all driveways shall be within minimum and maximum limits specified in Table 3-2:

Table 3-2
Driveway Widths

Location	Minimum	Maximum
Residential (single-family or duplex)	10 feet	25 feet
One-way, all other uses (A)	15 feet	20 feet
Two-way, all other uses (B)	25 feet	30 feet

(A) All one-way driveways shall be signed to denote "entrance only" and "exit only". A driveway agreement must be accepted in order to ensure proper maintenance of traffic signs (see sections 2.3 and 3.3).

(B) Gasoline service stations and developments which serve a substantial volume of trucks (more than 5 per day or 25 per week) of large trucks with at least 3 axles may choose to have driveways up to 40 feet wide.

For all ramp-type driveways, the curb transition shall extend at least 3 feet beyond the side of each apron when measured at the curb line or the edge of pavement, but not more than 5 feet. In addition, length of ramp-type driveways shall be at least equal to the curb transition length. Minimum length of curb cuts for radius-type and ramp-type driveways is shown in Table 3-3, based upon the functional classification of the street and the property use.

The width of street-type driveways for major traffic generation sites are often required to be wider than 40 feet to accommodate traffic patterns, in which case a waiver by the Knoxville Engineering Department will be necessary. The curb radius for street-type driveways shall not be less than 25 feet and not greater than 40 feet, unless a waiver is granted.

3.3 NONCONFORMANCE OF DRIVEWAYS

On occasion, the use of a land parcel or development project is changed so that the driveway is no longer in conformance with this policy. In this case, the owner or developer, at his expense, shall replace or modify all curbs, gutters, sidewalks and grassed areas to restore the driveway and lot frontage to a condition that is consistent with the land use and the neighborhood character. Curb/driveway replacement shall occur either during the site redevelopment project or, if no sitework is being performed, within six months of the land use change.

In locations where driveways are not permitted or are substandard, the Knoxville Engineering Department may request the property owner to either remove or modify the driveway as necessary within 180 days, or a lesser time if appropriate, by means of written notification. If the property owner shall fail to remove, modify or complete work upon the driveway within the allotted time, then the Knoxville Engineering Department may remove or modify such driveway, with the cost of construction being paid by the property owner or a lien attached to the property. The lien shall be twice the amount of the construction cost, with recovery of liens being enforced in Knox County Chancery Court or any other court of competent jurisdiction.

Table 3-3 Minimum Length of Curb Cut for Driveways (Radius-Type and Street-Type)				
		Minimum length of curb cut for driveway (based on street classification)		
	Driveway width	Arterial	Collector	Local
SINGLE FAMILY RESIDENTIAL	10'	25'	20'	20'
	12'	27'	22'	22'
	15'	30'	25'	25'
	20'	35'	30'	30'
	25'	40'	35'	35'
HIGH TRUCK VOLUME TRAFFIC	20'	60'	55'	50'
	25'	65'	60'	55'
	30'	70'	65'	60'
	35'	80'	70'	65'
	40'	90'	75'	70'
GASOLINE SERVICE STATION	20'	50'	40'	30'
	25'	55'	45'	35'
	30'	60'	50'	40'
	35'	60'	55'	45'
	40	60'	60'	50'
ALL OTHER USES	15'	45'	35'	25'
	20'	50'	40'	30'
	25'	55'	45'	35'
	30'	60'	50'	40'
Minimum turning radius into curb cuts		Arterial	Collector	Local
Single Family Residential		*7.5'*	*5'*	*5'*
High Truck Volume Traffic		*20'*	*17.5'*	*15'*
Gasoline Service Station		*15'*	*10'*	*5'*
All Other Uses		*15'*	*10'*	*5'*

3.4 MISCELLANEOUS DESIGN CRITERIA

Driveways shall be designed to meet the following conditions:

- Driveways shall constructed to conform to the existing paved street grade, unless a different grade is approved by the Stormwater Engineering Division.
- Driveways shall cross the sidewalk area (if any) to allow for a smooth and continuous sidewalk (either existing or proposed) along city rights-of-way.
- In general, an existing driveway shall not be incorporated into the construction of a new driveway unless it can be demonstrated that the sidewalk is in good condition consisting of a minimum 6" thick reinforced concrete slab meeting the city standards.
- Driveways are not allowed to contain any municipal facilities, such as traffic signal standards, fire hydrants, crosswalks, loading zones, utility poles, guy wires, fire alarm boxes, meter boxes, or

sewer cleanouts. The owner or developer may be authorized to relocate the municipal structures or appurtenances as necessary. The owner or developer may also request the city to relocate minor structures or appurtenances as necessary, with the cost to be borne by the owner or developer.

- If special pedestrian or vehicle hazards are created by two-way traffic, then a driveway may be restricted to one-way traffic. Proper signs and/or markings shall be erected and maintained A one-way driveway, due to the necessity of providing one-way signs, will require an approved driveway agreement (as described in Sections 2.3 and 3.2) in order to ensure proper maintenance of traffic signs. Failure to adequately erect and maintain standard one-way signs is a violation of this policy.
- Driveways shall be constructed at an angle not less than 75º to the street or roadway unless exempted by the Knoxville Engineering Department. This safety requirement is to allow clear sight distance in each direction. Exemptions may be considered for single driveways serving single-family residences.
- Driveways shall be located and constructed to provide adequate stopping sight distance for drivers entering and exiting the property.
- Driveways should generally be the standard ramp-type driveway at locations where sidewalks exist or are included in the construction. Either radius-type, ramp-type or street-type driveways may be constructed at locations where sidewalks do not exist. In general, a new driveway should be constructed to match the predominant type of driveway in existing use along that street or road.

3.5 CONSTRUCTION SPECIFICATIONS

All work performed in the construction of driveways and entrances shall conform to the current specifications established by the Tennessee Department of Transportation or the City of Knoxville. Use high-quality materials and standard paving methods to ensure a safe and durable finished project. The construction plans shall completely describe the pavement thickness and materials used. Materials shall generally be described using standard TDOT terminology.

3.6 MAJOR TRAFFIC GENERATORS

The Knoxville Zoning Ordinance defines a major traffic generator as a facility that is required to provide 400 or more parking spaces. The number and types of parking spaces are described in Article V, Section 7 (Minimum offstreet parking, access and driveway requirements). Any development projects which qualify as a major traffic generator shall submit a complete report to the Metropolitan Planning Commission, along with conceptual plans, that provides the following information:

- Projection of traffic generation for the development.
- Directional distribution of traffic and the assignment of projected traffic to the available access routes.
- Anticipated queue length and available vehicle storage of access routes.
- Impact of the development and proposed access routes on the operation of existing streets and neighborhoods.

3.7 HIGH VOLUME DRIVE-THROUGH FACILITIES

Any property that provides drive-through services (such as carwashes, cleaners, banks or fast food restaurants) is required to provide adequate storage areas for waiting vehicles. Storage area lengths, expected volumes, and queue times shall be submitted to the Knoxville Engineering Department for review. Factors that affect the review may include:

- Size and type of street that provides access to the property
- Potential for interference with traffic on collector and arterial roads
- Sight distances at the driveway entrance and exit
- Available parking to conduct business in a manner other than by drive-through

SECTION 4 DESIGN SCHEMATICS

The following design schematics show examples of common driveway layouts. Figure 8 shows the 3 types of driveways (radius-type, ramp-type, and street-type). As stated previously in Section 3.4, driveways and entrances must be aesthetically compatible with neighborhood standards and other driveways in the immediate vicinity. In addition, the presence of existing or proposed sidewalks is a major factor in selecting the driveway type.

When designing driveways and entrances, the engineer must consult the appropriate sections of the Knoxville Zoning Ordinance for property setback requirements, parking requirements and building limitations. In addition, a clear sight triangle is defined by Article V, Section 6-C, of the Knoxville Zoning Ordinance. This minimum level of sight distance is considered adequate for very infrequent use on low-volume local streets. Higher standards for sight distance should be considered for driveways and entrances with high volumes of traffic or that connect to roads with higher design speeds.

Example of Single Family Residential Driveway Schematic

Not to scale

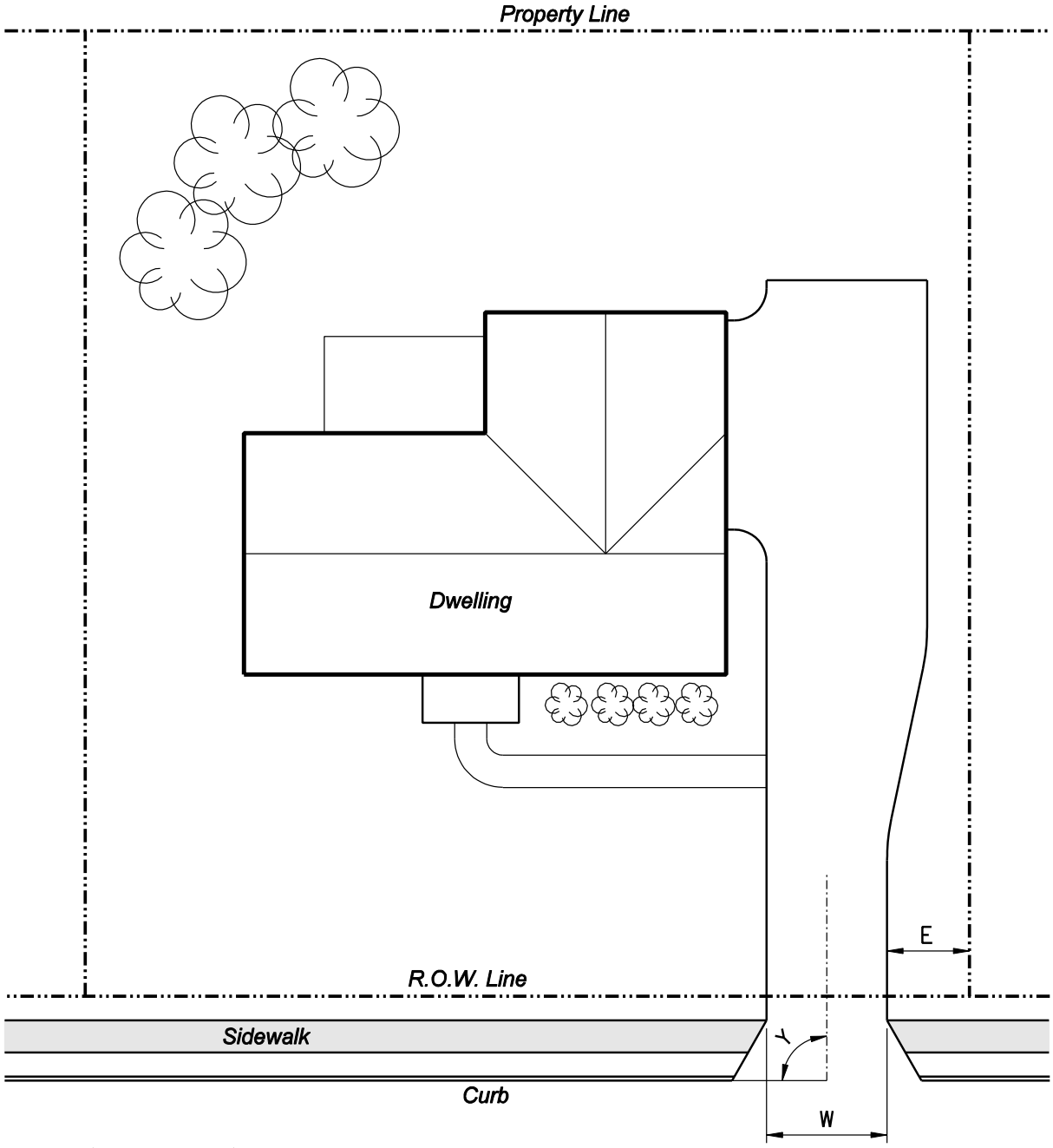

W = 10′ MIN - 25′ MAX
E = MIN/MAX VARIES WITH STREET CLASSIFCATION
Y = 75° TO 90°

NOTE: SEE APPROPRIATE ZONING ORDINANCE FOR BUILDING AND PARKING LOT SET BACK REQUIREMENTS.

Figure 1

Example of Multi-Family Residential Driveway Schematic

Not to scale

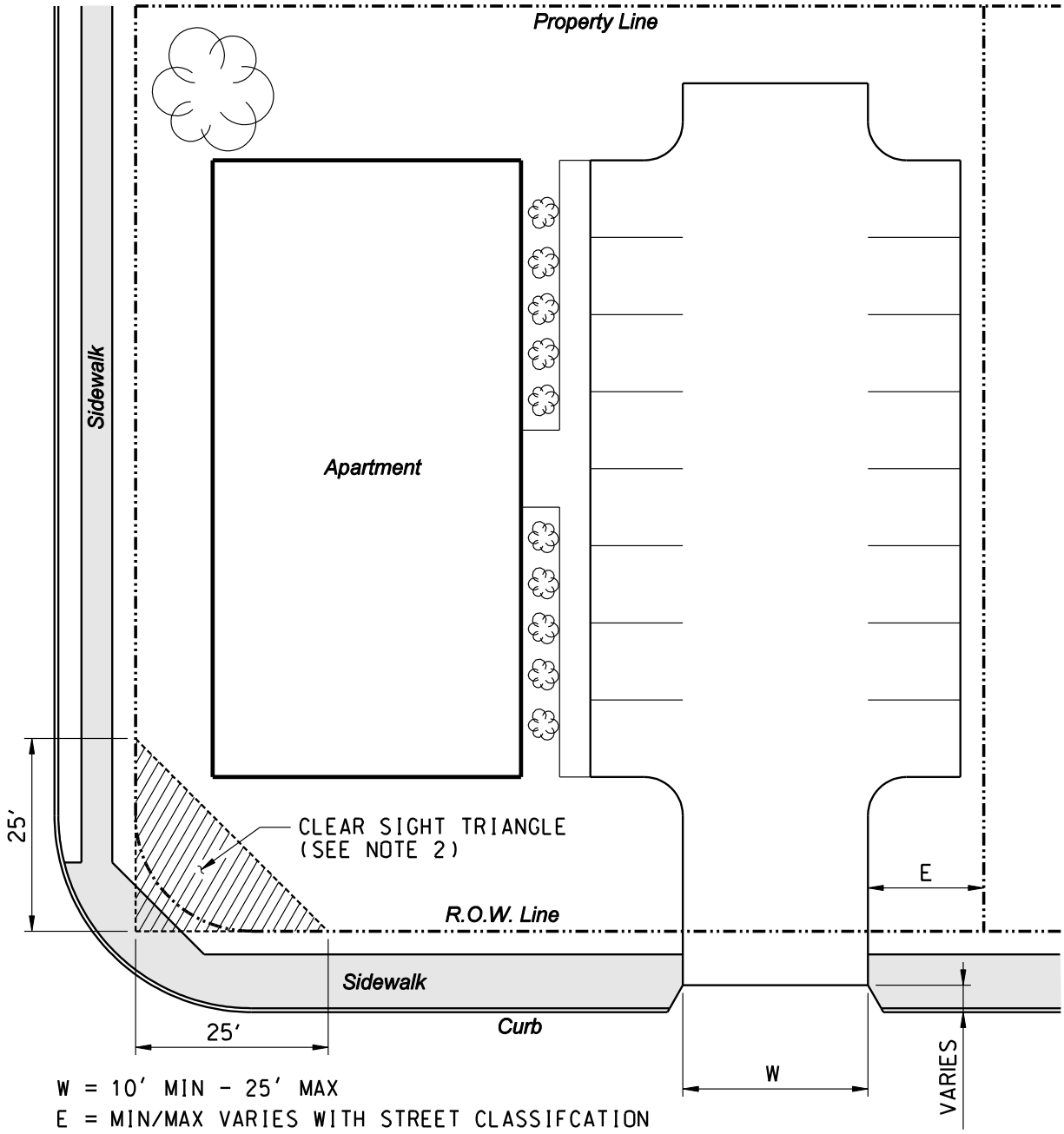

NOTES: 1. SEE APPROPRIATE ZONING ORDINANCE FOR BUILDING AND PARKING LOT SET BACK REQUIREMENTS.

2. SEE ARTICLE V. SECTION 6-C OF THE ZONING ORDINANCE FOR THE CITY OF KNOXVILLE FOR CLEAR SIGHT TRIANGLE.

Figure 2

Example of Single Driveway Schematic

Not to scale

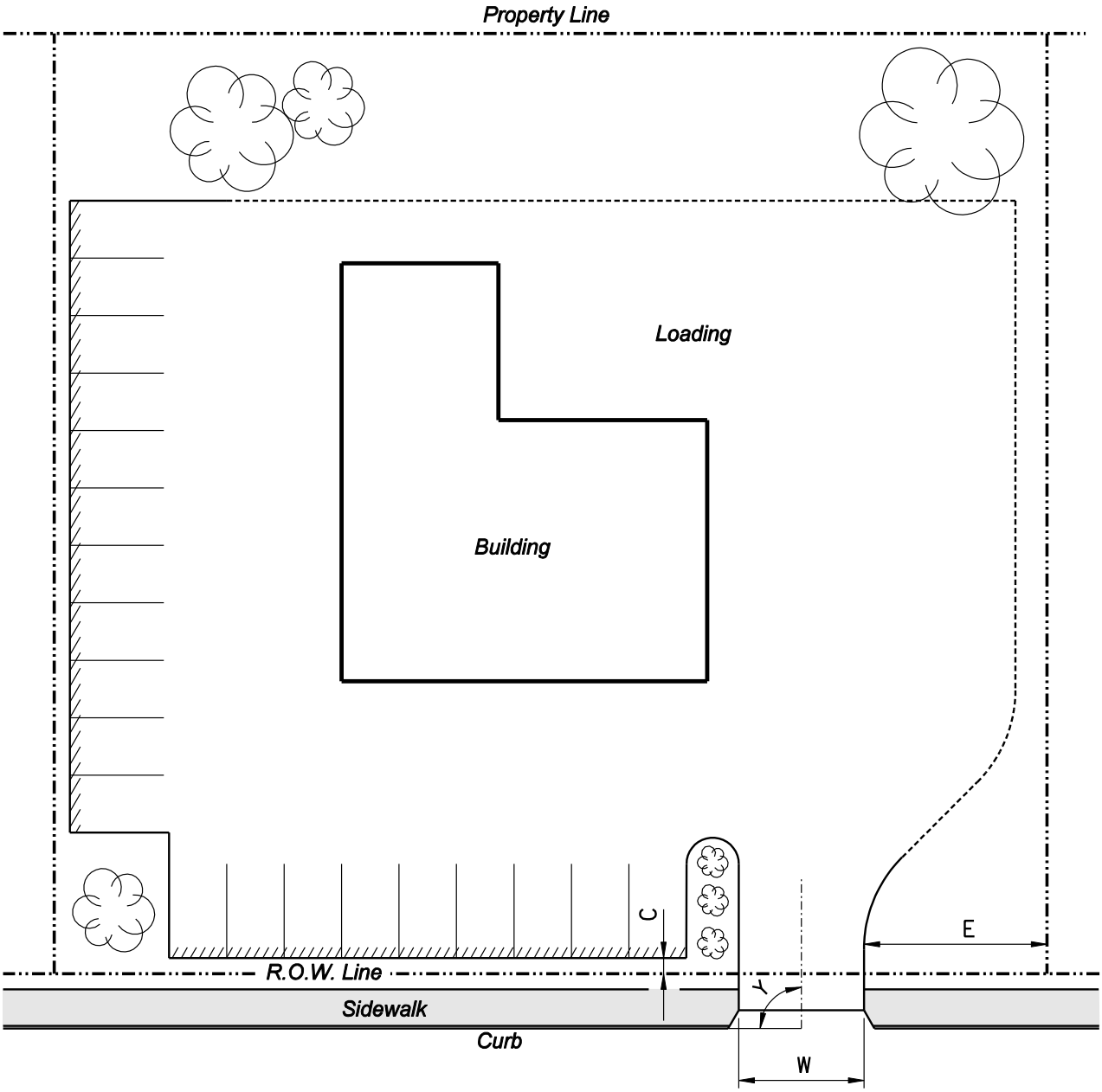

W = 20' MIN - 30' MAX
C = 3' MIN
E = MIN/MAX VARIES WITH STREET CLASSIFCATION
Y = 75° TO 90°
6" RAISED CURB

NOTE: SEE APPROPRIATE ZONING ORDINANCE FOR BUILDING AND PARKING LOT SET BACK REQUIREMENTS.

Figure 3

Example of Double Driveway Schematic

Not to scale

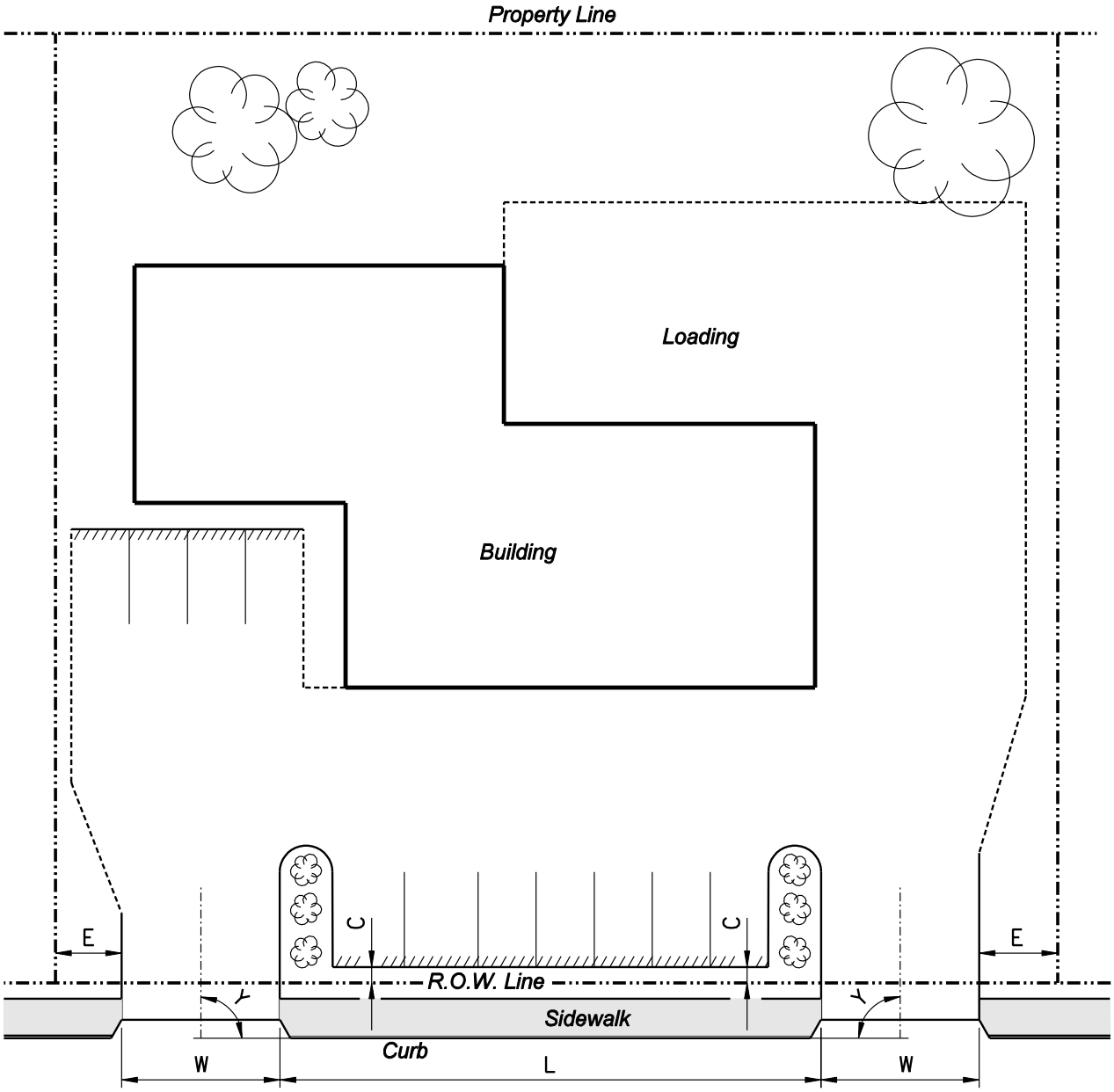

W = ONEWAY DRIVE: 15′ MIN - 20′ MAX
TWOWAY DRIVE: 20′ MIN - 30′ MAX

C = 3′ MIN

L = WIDTH OF WIDEST DRIVEWAY, MIN

E = MIN/MAX VARIES WITH STREET CLASSIFICATION

Y = 75° TO 90°

6″ RAISED CURB

NOTE: SEE APPROPRIATE ZONING ORDINANCE FOR BUILDING AND PARKING LOT SET BACK REQUIREMENTS.

Figure 4

Example of Gas Station Double Driveway Schematic

Not to scale

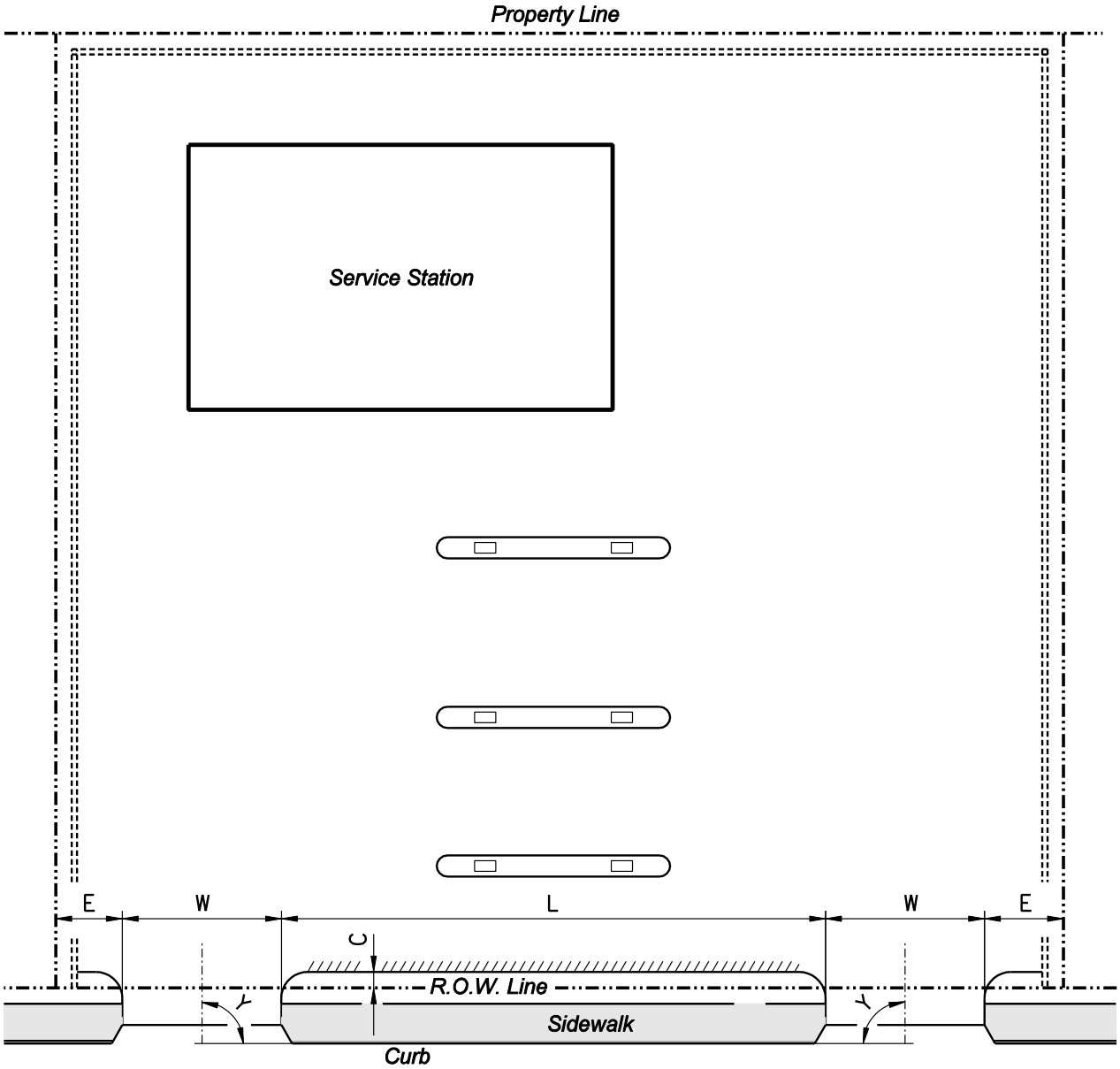

W = ONE DRIVEWAY: 20′ MIN - 40′ MAX
E = MIN/MAX VARIES WITH STREET CLASSIFCATION
L = WIDTH OF WIDEST DRIVEWAY MIN

Y = 75° TO 90°
C = 3′ MIN
6″ RAISED CURB

NOTE: SEE APPROPRIATE ZONING ORDINANCE FOR BUILDING AND PARKING LOT SET BACK REQUIREMENTS.

Figure 5

Example of Ramp Type Driveway Schematic

Not to scale

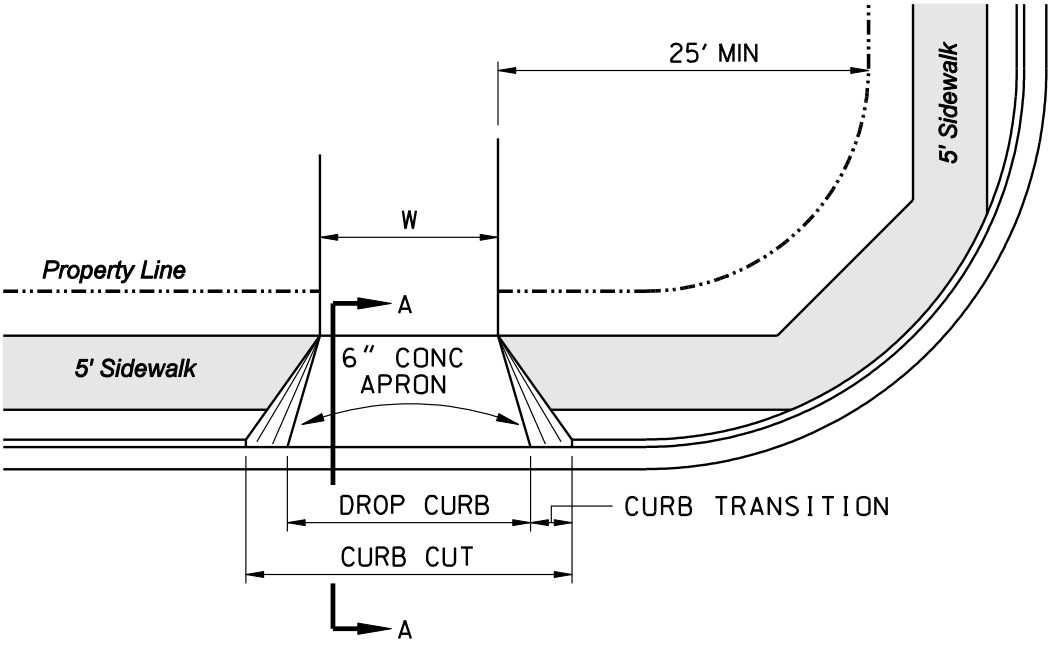

Plan View

Not to scale

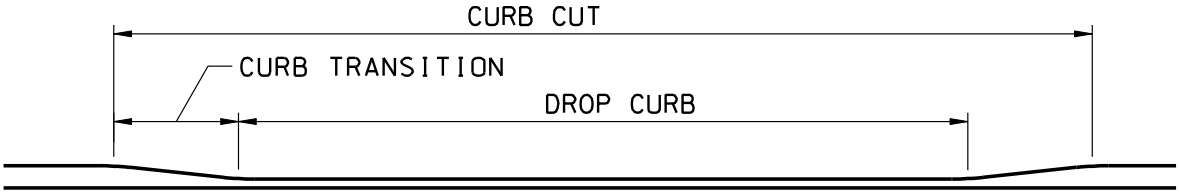

Elevation View

Not to scale

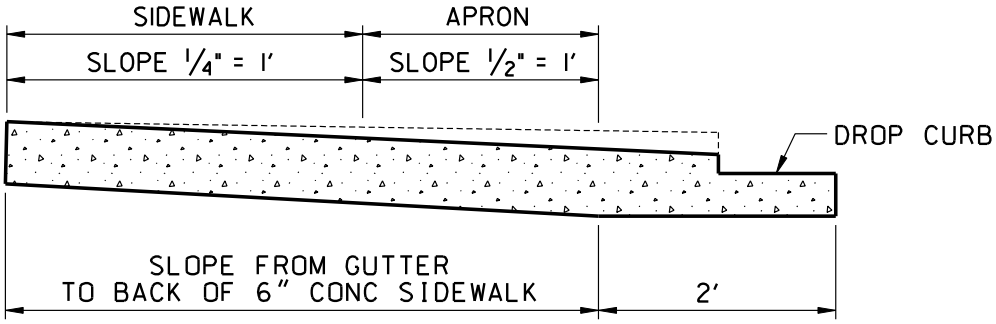

Section A-A

Not to scale

Figure 3

Example of Street Type Driveway Schematic

Not to scale

Figure 4

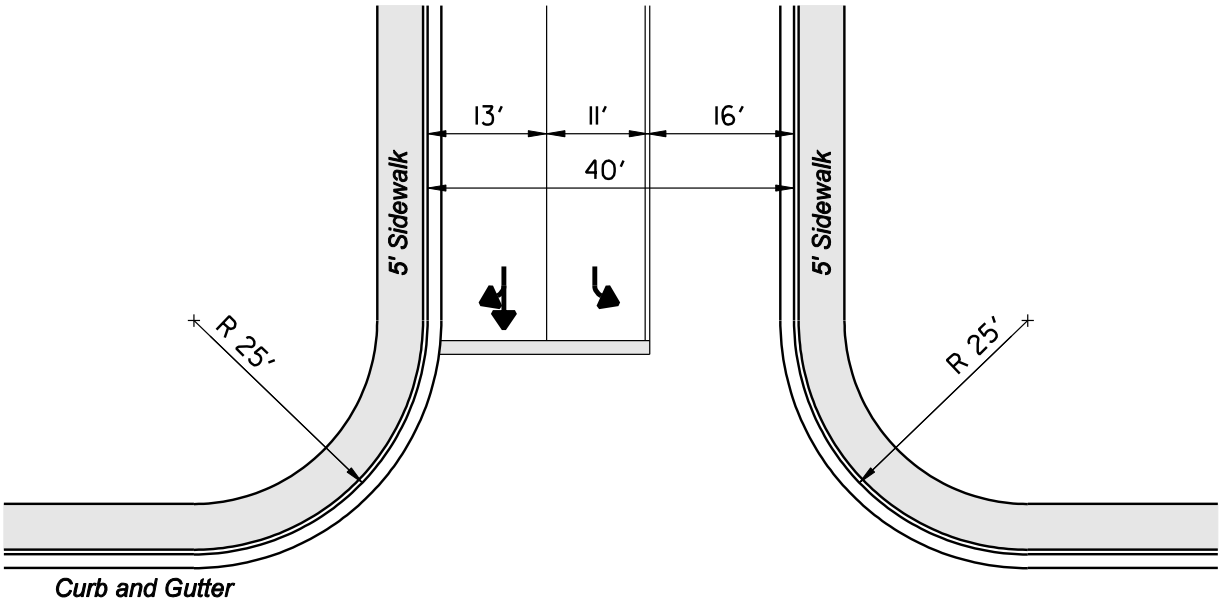

40' Street Type Driveway

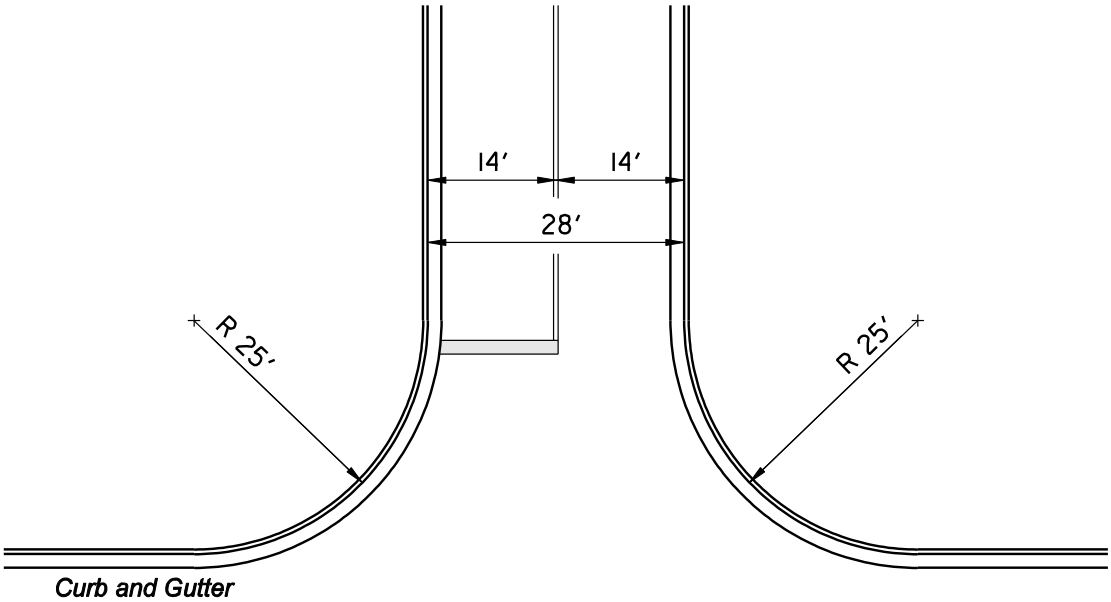

28' Street Type Driveway

Examples of Driveway Types

Not to scale

Ramp Type Drive

Not to scale

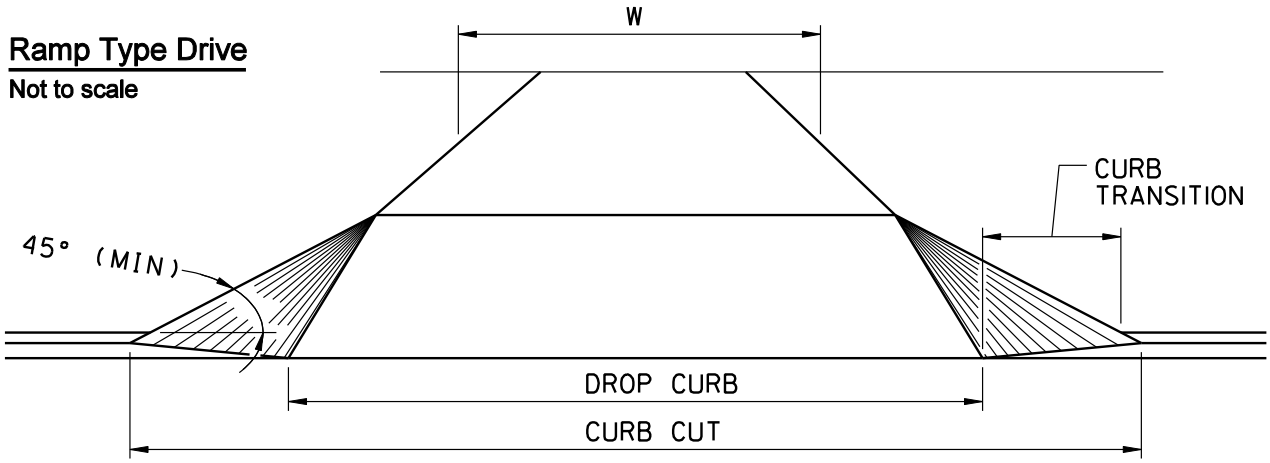

Radius Type Drive

Not to scale

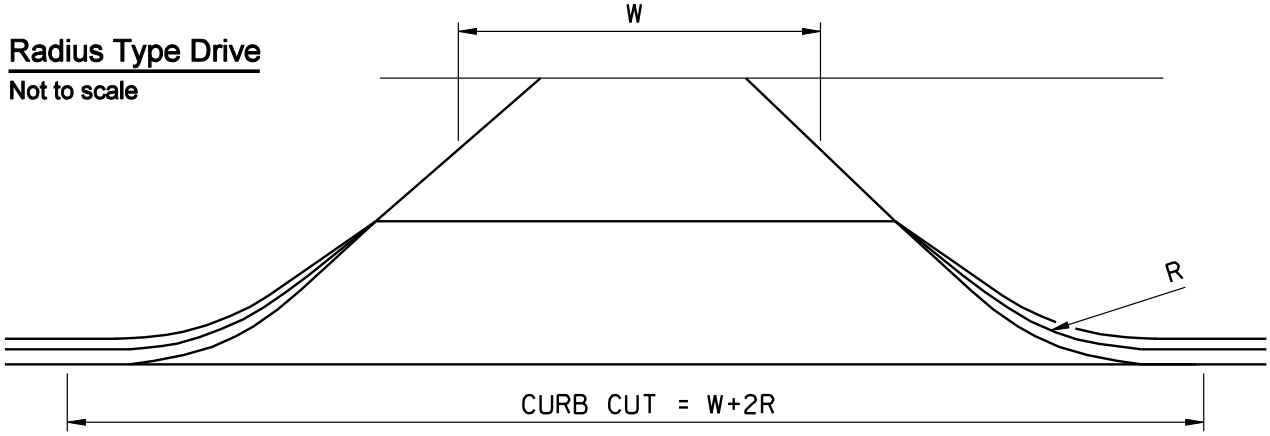

Street Type Drive

Not to scale

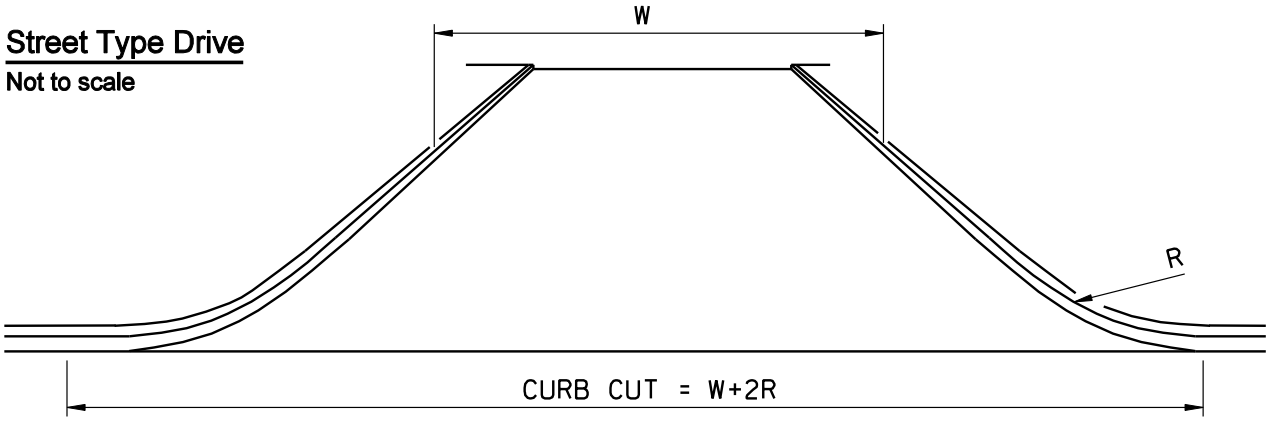

Figure 5

Policy 02

COVENANTS FOR PERMANENT MAINTENANCE OF STORMWATER FACILITIES (CPMSF)

Covenants for Permanent Maintenance of Stormwater Facilities (CPMSF) is a permanent maintenance agreement that is recorded (and attached to the deed by reference) as a permanent contract in the official records of the Knox County Register of Deeds. The purpose of this document is to ensure perpetual and proper maintenance, repair and/or replacement of a stormwater facility by the current property owner as well as any future owners. The requirement for a permanent maintenance agreement for stormwater facilities is contained in the Knoxville Stormwater and Street Ordinance (Section 22.5-34). Maintenance of stormwater facilities on private property is the responsibility of the property owner rather than the City of Knoxville. The term *"covenants"* refers to multiple promises from the property owner to the City of Knoxville.

The Stormwater Engineering Division requires that the CPMSF must be properly signed and officially recorded before issuing a site development permit or a building permit. The plans reviewer in the Stormwater Engineering Division will notify the person submitting a site development plan if a CPMSF is required. The completed CPMSF Worksheet (Appendix A) is either mailed or faxed to the Stormwater Engineering Division. The CPMSF document is then prepared and forwarded to the property owner for execution. The property owner is responsible for signing the document and having it notarized. The attached basic CPMSF template is for a typical stormwater detention facility with first flush treatment. Additional requirements may be necessary, based upon the type of detention and/or stormwater quality treatment provided.

When the property owner has signed the document and had it notarized, return (1) the original document and (2) a check in the dollar amount specified and made payable to the Knox County Register of Deeds to:

Construction Bond Coordinator
City of Knoxville, Engineering Department
City County Building, Suite 480
400 Main Street
Knoxville, TN 37902

The Engineering Department records the document with the Register of Deeds for Knox County. The property owner will be sent a copy of the recorded CPMSF document along with a receipt.

The property owner is also responsible for the preparation and recording of a survey plat* that shows the stormwater facility and easement. A survey plat must be prepared by a Registered Land Surveyor (RLS) actively registered in the State of Tennessee. The Instrument Number assigned to the CPMSF by the Knox County Register of Deeds must be placed on the new survey plat, so that future property owners and others will have notice of the obligations that run with ownership of the property. The plat must show an easement boundary around each stormwater or water quality facility, complete with bearings and distances, and a tie line from each easement to a property corner. If the facility easement is not directly accessible from an adjoining public street or right-of-way, then a 20-foot traversable access easement must be shown for the stormwater facility.

---

* NOTE: See the Minimum Subdivision Regulations for platting requirements. Consult the plat review form in Appendix A and the plat review flowcharts in Chapter 2 for additional information, or call the Stormwater Engineering Division (telephone 215-2148) as necessary.

CONTRACT NUMBER:

_____

Form 5/10/2000
This instrument prepared by:
Sharon E. Boyce
Senior Attorney
City of Knoxville

THIS DOCUMENT IS A BLANK TEMPLATE USED BY STORMWATER ENGINEERING DIVISION IN PREPARING A CPMSF.

COVENANTS FOR PERMANENT MAINTENANCE OF STORMWATER FACILITIES

THE TERM "STORMWATER FACILITIES" MAY REFER TO WATER QUALITY AND/OR WATER QUANTITY FACILITIES (i.e. detention basins, retention basins, swales, pipes, oil/water separators, sand filtering devices, etc.)

_____ , (an individual/ a Tennessee or other state corporation/partnership), with its (office/residence) located at _____ , (hereinafter "Property Owner") grants these Covenants for Maintenance of Stormwater and/or Water Quality Facilities (hereinafter "Covenants") on this the __ day of _____ 2003.

WITNESSETH:

TEMPLATE ONLY ! Do not use this form to execute CPMSF.

WHEREAS, City of Knoxville Ordinance No. 0-155-03, as amended, requires property owners to enter into permanent maintenance agreements for stormwater and/or water quality facilities before the property is developed.

NOW THEREFORE, as a condition of the Department of Engineering's issuance of a Site Development Permit, the Property Owner warrants, covenants and grants as follows:

1. The Property Owner warrants that it is the owner of property located within the City of Knoxville at _____ (address); **CLT Number**: Map___ Insert___ Group___Parcel____; **City Block Number: ____ ;** and more specifically of record by deed dated ____ in (**Warranty Book ____ Page ____** or **as Instrument Number ___**) with the Knox County Register of Deeds, (hereinafter referred to as the "Property") and that it has the right to grant said Covenants.

2. The Property Owner desires to develop all or a portion of the above described Property according to the Site Development Permit to be issued by the City Engineering Department based on the Property Owner's site/subdivision plan entitled _____, dated _____ and prepared by _____ (hereinafter "Plan").

3. The Property Owner will construct and maintain the stormwater and/or water quality facilities in strict accord with the Plan, specifications, calculations, and conditions required by the Department of Engineering.

4. The Property Owner will provide a surety bond, letter of credit or cash bond acceptable to the City and in an amount to be determined by the Department of Engineering to guarantee that the stormwater and/or water quality facilities are constructed in accordance with the Plan.

5. To ensure that subsequent property owners have notice of these Covenants and the obligations therein, the Property Owner will include in all instruments conveying any or all of the above described Property on which the stormwater and/or water quality facilities are located, the specific instrument numbers referencing these Covenants and the recorded subdivision plat indicated in paragraph 12 herein.

6. The Property Owner will maintain the approved stormwater and/or water quality facilities in good working order acceptable to the City Department of Engineering. Minimum maintenance of the said facilities, shall include sediment, debris, oil, hydrocarbons, and foreign materials removal; cutting and removal of woody vegetation on an annual basis; and keeping emergency spillways functional and clear of woody vegetation and debris so that the operation and capacity of the stormwater and/or water quality facilities continue to meet the standards in said Plan.

7. In order to provide access to stormwater and/or water quality facilities by personnel, vehicles and equipment, the Property Owner will provide a twenty (20) foot wide access within an easement from a public street in strict accord with the Plan and any conditions required by the Department of Engineering. The Property Owner further covenants that no structure or building will be erected on the access easement; that no woody vegetation shall be allowed to grow on the easement; and that no use will be made which will interfere with the use of said easement for access to the facilities. If access to the facilities is obstructed and the City is required to remove the obstruction, the City will follow the notice procedure, double lien, and collection process as set forth in Paragraph 9 herein.

8. Property Owner grants permission to the City, its agents and employees, to enter upon the property to inspect and monitor said facilities whenever the City deems necessary and further for the City or its agents to repair, replace, maintain and reconstruct said facilities as permitted herein.

9. (a) If the City determines that the stormwater detention and/or water quality facilities are not being maintained in good working order and gives written notice to the current property owner to repair, replace, reconstruct or maintain said facilities within a reasonable time, and the property owner fails to comply with the City's notice within the time specified, Property Owner authorizes the City or its agents to enter upon the Property to repair, reconstruct, replace or perform maintenance on said facilities at the Property Owner's expense.

(b) Property Owner further authorizes the City to place a lien for double the amount of said expenses of repair, maintenance or reconstruction against the property.

(c) If the Property Owner fails to pay the City for the above expenses after forty-five (45) days written notice**,** the Property Owner authorizes the City to collect said expenses from the Property Owner

through the appropriate legal action, with the Property Owner to be liable for the reasonable expenses of collection, court costs, and attorney fees.

(d) Property Owner recognizes, however, that this remedy does not obligate the City to maintain or repair any stormwater facilities and/or water quality facilities or restrict the City from pursuing other or additional legal remedies against the Property Owner.

10. These Covenants shall be binding upon the Property Owner's heirs, administrators, executors, successors and assigns, and any and all subsequent property owners. Upon conveyance of the Property, these Covenants shall transfer to and be binding upon the new property owner, and the original Property Owner shall be released from any and all responsibilities and obligations under these Covenants.

11. These Covenants are permanent and shall run with the land.

12. Property Owner will record a plat showing and accurately defining the easements for stormwater and/or water quality facilities and an access easement to these facilities on a survey plat of record. The plat must reference the Instrument Number where these Covenants are recorded and contain a note that the property owner is responsible for maintaining the facility.

13. Property Owner will record these Covenants with the Knox County Register of Deeds and return the original to the Department of Engineering before the final plat is signed by the Department of Engineering, and before all or any portion of the property is transferred or conveyed.

APPROVED BY DEPARTMENT OF ENGINEERING:

By:_____

Title: _____

Date:_____

THIS DOCUMENT IS A BLANK TEMPLATE USED BY STORMWATER ENGINEERING DIVISION IN PREPARING A CPMSF.

PROPERTY OWNER:

_____

BY: _____

TITLE: _____

THIS DOCUMENT IS A BLANK TEMPLATE USED BY STORMWATER ENGINEERING DIVISION IN PREPARING A NOTARY WITNESS FORM.

STATE OF TENNESSEE

COUNTY OF KNOX

Before me, _____, a Notary Public in and for the County and State aforesaid, personally appeared _____, with whom I am personally acquainted (or proved to me on the basis of satisfactory evidence), and who, upon oath, acknowledged himself to be the _____ (Title) of _____, the within named bargainor, a corporation, and that he/she being authorized so to do, executed the foregoing instrument for the purpose therein contained, by signing the name of the corporation by himself/herself as _____

WITNESS, my hand and official seal at office this _____ day of _____ , 2003.

MY COMMISSION EXPIRES:

_____ _____

NOTARY PUBLIC

Policy 03

CREEK RESTORATION AND CHANNEL MAINTENANCE

The City of Knoxville offers a public service to assist property owners with a limited amount of maintenance for creeks and drainage channels. The City of Knoxville has a dedicated full-time field crew (Creek Cleanup Crew) to help maintain and restore the major creeks and other urban drainage channels.

The ultimate responsibility for all maintenance of creeks and drainage channels will remain with the property owner. If there is a drainage easement, the maintenance responsibility still remains with the property owner, even if the City of Knoxville has historically maintained the drainage channel for the clearly defined general public welfare. Drainage channels shall include (but are not limited to) natural drainage ditches, manmade drainage ditches, swales, creeks, streams, dry creek beds and open culverts.

The Creek Cleanup Crew is usually dedicated to inspecting the creeks and drainage channels on a regular basis. Routine maintenance, such as litter and debris removal, is performed as the crew progresses. Although most of the work is done by hand, larger items may need to be removed with special equipment. Blockages will be removed, and very minor grading can be performed as needed to restore channel conveyance.

The Creek Cleanup Crew will also try to maintain or improve the amount of shade provided by large trees along stream reaches. Natural snags and other obstructions that cause pool areas are generally not removed if channel conveyance is not affected. Special problem sites are noted, with recommendations for work orders outside of the routine schedule. In general, the crew does not perform clearing or mowing of streambank areas and other riparian zones. This practice is highly discouraged by the Tennessee Department of Environment and Conservation (TDEC) to prevent grass and leaves from entering the creeks.

The Creek Cleanup Crew is instructed to report incidences of illicit discharges and improper disposal to the Stormwater Quality Hotline for further investigation. This may include: trash and debris, discharge of liquids through culverts or pipes, grass and leaves in the creek, food and organic nutrients in the creek, etc. See AM-01 and IC-01 of the Knoxville BMP Manual for more guidance on non-stormwater discharges and a quick-reference table for disposal alternatives.

The City of Knoxville helps to support the "Adopt-A-Stream" program, which is now coordinated by the Water Quality Forum (www.waterqualityforum.org). A group of volunteers can adopt a section (typical unit = ¼ mile but varies widely) to periodically pickup trash and debris along stream and creek reaches. The volunteers sign up through the Water Quality Forum, receive training and supplies, and are recognized by posted Adopt-A-Stream signs. Each group of volunteers will be supported by the local government with jurisdiction over the particular stream reach, and the local government (Knox County, City of Knoxville, Town of Farragut) will provide trash bags, trash pickup and other supplies as needed. The volunteers are encouraged to note field conditions and stream quality, and to also report locations of large debris for future removal by the Creek Cleanup Crew. Volunteers may also support other types of community projects such as streambank stabilization, storm drain stenciling, or habitat enhancements by contacting the Water Quality Forum or the Knoxville Stormwater Engineering Division.

Policy 04

DRAINAGE EASEMENTS

This policy specifies the drainage easement widths for drainage pipes with diameter (or span) up to 60 inches. The Stormwater Engineering Division may require different drainage widths based upon engineering judgment to allow for unusual circumstances or field conditions. For most small-diameter pipes, the depth from the top of ground to the pipe invert is usually less than 6 feet anywhere along the length of culvert. For pipe sizes that are 24" or less, the minimum easement width shall be 10 feet.

Larger drainage pipes or deeper trenching depths will be reviewed by the Stormwater Engineering Division. In some cases where a trenching box can be used, a drainage easement 20 feet wide is generally adequate. Sandy soils, steep slopes and difficult access approaches will require wider drainage easements.

Pipe Size (diameter or span)	**Typical Width of Stormwater Drainage Easement**		
	(based on maximum depth from top of ground to pipe invert)		
	Less than 6 feet	*From 6' to 12'*	*More than 12 feet*
15" to 24"	10 feet	20 feet	30 feet
27" to 48"	15 feet	20 feet	30 feet
54" to 60"	20 feet	20 feet	30 feet

For pipe types which are not circular, the span shall be used to determine minimum easement widths rather than the diameter. The span, defined to be the maximum inside width of a pipe or culvert, shall be used to define drainage easement widths for noncircular shapes.

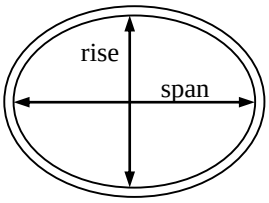

Elliptical pipe

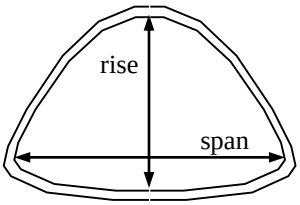

Arch pipe

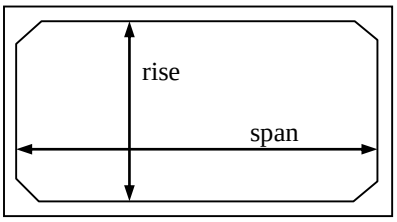

Precast concrete box culvert

Policy 05

EASEMENTS FOR STORMWATER CONTROL AND WATER QUALITY FACILITIES

The City of Knoxville has been mandated by the federal government to provide for the permanent maintenance of stormwater facilities that manage stormwater runoff and affect stormwater quality entering our streams and other public waters. The *Knoxville Stormwater and Street Ordinance* gives design and development requirements for stormwater facilities. Consequently, the development of private property within the city requires property owners to formally accept responsibility for maintaining these facilities on their property. To acknowledge and facilitate this responsibility, the property owner must execute a special written document and dedicate easements before a site development permit or a building permit will be issued.

The special document is entitled ***Covenants for Permanent Maintenance of Stormwater Facilities*** (CPMSF, or also known as a Covenants document). Upon execution of this document, the property owner covenants or affirms that he will build these facilities according to design plans approved by the City Engineering Department, and that he or future owners of this property will maintain the stormwater facilities in good working order in perpetuity. This document must be recorded with the Knox County Register of Deeds and referenced in future survey plats and deeds. For assistance, contact the City Engineering Stormwater Division at 215-2148.

Section 22.5-34 of the Knoxville Stormwater and Street Ordinance stipulates that permanent easements must be established for stormwater and water quality facilities. These easements must be located, defined, dedicated and identified on a survey plat approved by the Metropolitan Planning Commission (MPC) and recorded with the Knox County Register of Deeds. If any facility is not constructed as shown on the approved design plans and located satisfactorily within the dedicated easement, the owner will be required to revise and re-record the document or plat that dedicates the original easement.

TYPES OF FACILITIES AND EASEMENTS

Easements are required for the following types of facilities, collectively referred to as "stormwater facilities" and/or "stormwater systems":

- **Stormwater Control Facilities** (detention basin, retention basin, drywell, constructed wetlands)
- **Water Quality Facilities** (oil/water separator, sand filtration inlet, grit chamber, oil skimmer)
- **Drainage Channels and Piping** (culvert, pipe, grate inlet, curb inlet, flume, stream, ditch, swale)

Three types of easements may be required for Stormwater Control and Water Quality Facilities:

- **Facility Easements** (encompasses the facility)
- **Access Easements** (provides access from a public road to the *facility easement)*
- **Drainage Easements** (for open channels and pipes that carry flowing water)

Facility easements are required for all stormwater control and water quality facilities. The amount of easement needed and the location of easement boundaries for **stormwater control facilities** varies by type but can not be less that 20 feet x 20 feet. For detention and retention basins, the easement must be at least 5 feet outside the top of cut slope and at least 5 feet outside the toe of fill slope. The final location of all stormwater control facility easements must be coordinated by the design engineer and the surveyor, and then approved by the Engineering Department.

In addition to easements, a Special Pollution Abatement Permit (SPAP) is required for **water quality facilities.** Like stormwater control facilities, the amount and location of easements needed for water quality facilities must be approved by the Engineering Department but cannot be less than 20 feet x 20 feet. The surveyor, design engineer, and Department representative must coordinate closely in this effort as well.

Access easements are normally required when the facility easement does not directly abut a public road and there is not an easily traversable access route from a public road to the facility. When an access easement is required, it may not be merged with the facility easement.

Drainage easements are required for open channels, piping, and associated structures. This type of easement is required when drain blockage will result in flooding the property of others, or when deemed necessary by the Engineering Director. The width of these easements is determined by several factors, including size, shape, depth of pipe, maintenance equipment anticipated, type and material of pipe, etc. See Policy 04 (Drainage Easements) for minimum easement widths for common pipe sizes and shapes.

PLATTING REQUIREMENTS

Information that must be shown on the survey plat is listed below by the type of easement. Every stormwater control facility and every water quality facility must be located on a permanent easement that is not shared with any other type of utility or access easement.

- FACILITY EASEMENTS

  1. Covenants Document Reference and Owner's Responsibility Note – Provide instrument number (15 digits) where the Covenants document is recorded and responsibility note similar to the following:

     "The property owner(s) is (are) responsible for maintaining stormwater facilities on this property. See Covenants document recorded with the Register of Deeds as Instrument No. ."

  2. Performance Bond Stamp – Appropriate stamp on plat and signed by the Stormwater Engineering Division; see Minimum Subdivision Regulations (MSR) Section 44-115.

  3. Identification – Identify purpose of easement and if structure is existing or proposed, such as "Easement for As-Built Detention Basin" or "20-Ft. Easement for Proposed Oil/Water Separator".

  4. Easement Location - Easement boundary plotted accurately and to scale.

  5. Easement Description - Bearings & distances sufficient to permit confirmation of Category I ratio of precision (bearings to nearest minute or better, distances to nearest hundredth of a foot).

  6. Property Ties - Bearings & distances sufficient to fix easement location relative to property boundary (bearings to nearest minute or better, distances to nearest hundredth of a foot).

  7. Easement Area - Area of stormwater control and water quality facility easements in square feet.

  8. Any additional information necessary to properly describe and locate the easement on the ground by field survey.

- ACCESS EASEMENTS

Every stormwater control and water quality facility must have traversable access from a public road. Therefore, an access easement will be required when the facility easement: 1) does not abut a public road, or 2) does not contain a traversable route from a public road to the facility. At the discretion of the Engineering Director, access easement widths may vary but must be at least 20 feet wide. An access easement may not be merged with the facility easement it serves. Minimum requirements for traversable access are contained in Policy 06, Maintenance Access for Stormwater Management Facilities.

Unlike easements that provide primary access to property, access easements to stormwater facilities do not normally require conveyance by a recorded written document. Also, property owners are not normally required to construct a roadway or trail. However, nothing is allowed in these easements that will substantially obstruct access when needed (large trees, buildings, manholes, utility poles, commercial signs, fences, etc.).

The following is required for access easements:

1. Identification and Width – Identify purpose and width of easement, such as "20-Ft. Detention Basin Access Easement" or "20-Ft. Water Quality Facility Access Easement" (also show perpendicular width graphically between right-of-way lines).
2. Easement Location – Easement right-of-way lines and centerline plotted accurately and to scale.
3. Easement Description – Bearings & distances labeled along right-of-way lines sufficient to permit confirmation of Category I ratio of precision (bearings to nearest minute or better, distances to nearest hundredth of a foot) [bearings & distances not required along right-of-way lines if labeling plotted centerline is preferred] .
4. Property Ties – Bearings & distances sufficient to fix easement location relative to public road right-of-way and property boundary (bearings to nearest minute or better, distances to nearest hundredth of a foot).
5. Easement Area – Not required.
6. Any additional information necessary to properly describe and locate the easement on the ground by field survey.

Policy 06

MAINTENANCE ACCESS FOR STORMWATER MANAGEMENT FACILITIES

Although inspection and maintenance of stormwater management facilities are the sole responsibility of the property owner, an access easement shall be required to allow city inspectors (and potentially vehicles or equipment) to enter the property. This policy contains the design and maintenance parameters for a maintenance access easement.

A maintenance access easement is generally not required when the stormwater management facility is located within an easement that is adjacent to public right-of-way.

The maintenance access easement shall have the following minimum requirements:

A. Width of at least 20 feet with no sharp corners or curves that would prevent vehicle movement.

B. Maximum slope of 15% with gradual changes of vertical slope. Slopes should be stabilized to withstand heavy equipment traffic.

C. No trees or shrubs within the easement.

D. A vehicle turnaround or maneuvering area, if the length, slope or terrain of the easement should make vehicle movements dangerous.

The maintenance access easement shall not generally cross the emergency spillway, unless the spillway is specifically designed for that purpose and is properly stabilized to allow heavy equipment to traverse it.

The maintenance access easement should be designed to allow access to the following locations (for inspection and maintenance purposes):

- Sediment forebay
- Riser and other outlet control structures
- Downstream end of the outlet culvert
- Monitoring equipment and meters

Often, access within an outlet control structure is restricted by using lockable manhole covers. This is encouraged in areas where children could potentially play nearby. However, the keys should be maintained by the property owner or his designee who would be generally available to city personnel during normal working hours. In addition, manhole steps shall be provided within the outlet control structure to access any control valves.

Policy 07

MAINTENANCE RESPONSIBILITY FOR STORMWATER DRAINAGE SYSTEMS

1. Purpose

The purpose of this policy is to provide guidelines for City of Knoxville Engineering Department employees to identify, evaluate, and resolve existing drainage problems; this policy also defines maintenance responsibilities for stormwater drainage systems. The guidelines in this policy are intended to apply to existing stormwater drainage systems only; new stormwater drainage systems shall be designed as specified in other portions of this manual and in the Knoxville Stormwater and Street Ordinance.

2. Drainage Channels

For the purpose of this policy, drainage channels shall include, but are not limited to: natural or man-made drainage ditches, swales, creeks and wet or dry open culverts.

The City of Knoxville assumes responsibility for the construction, improvement and maintenance of drainage channels within the public right-of-way when it is for the clearly defined general public welfare. The City assumes no responsibility for maintenance or improvement of drainage channels on private property. Where a drainage easement exists, the City may maintain or improve drainage channels at its option when it is for the clearly defined general public welfare. Engineers and technicians of the Engineering Department are authorized to act on behalf of the City within these guidelines.

3. Storm Drains

The City of Knoxville assumes responsibility for the installation, improvement and maintenance of storm systems on the right-of-way when same is for clearly defined general public welfare. The minimum diameter of pipes installed by the City of Knoxville will be no less than fifteen inches, unless an abnormal condition exists. The City does <u>not</u> assume responsibility for the installation or improvement of storm systems on the right-of-way as follows:

- Storm drains desired by the adjacent property owner for aesthetics.
- Storm drains desired by a property owner or required by the City to allow street access or to aid development.
- Storm drains desired by an adjacent property owner as an alternative to a properly functioning existing ditch or proposed ditch.

The City of Knoxville assumes no responsibility for the maintenance, installation or improvement of pipes or stormwater systems on private property. Where a drainage easement exists, the City may maintain, install or improve a stormwater system at its option for the clearly defined general public welfare. Any installation on private property must be approved by the Engineering Director or the Public Service Director. An easement or right-of-entry must be obtained before an approved project shall commence.

Any project that requires the installation or replacement of pipes in excess of one hundred feet or requires pipes with an equivalent diameter greater than thirty six inches may be considered beyond the scope of the Public Service Department. These projects will be recommended for either the Neighborhood Drainage Program or a Capital Improvements Project (see section 9).

4. Curbing

The City of Knoxville can install asphalt curbing and asphalt rollover curbs to help correct structure flooding drainage issues. Asphalt curbing will not be installed in, but not limited to, the following situations:

- Where a drainage channel, as described in Section 2, can be installed or re-established to provide the same amount of flooding relief.
- Where the curbing will cause a safety hazard.
- Where the curbing will cause flooding issues to other properties.

Asphalt rollover curbs will not be installed in, but not limited to, the following situations:

- Along concrete or gravel driveways.
- Along gravel, dirt or grass pulloffs.
- Where the addition of the curb may cause damage to vehicles passing over it.

5. Priority of Stormwater Maintenance Activities

The order in which stormwater projects will be prioritized will be based on the date the work order was submitted to the Public Service Department as well as the type of flooding that is occurring. The four types of flooding complaints are prioritized as follows:

1. Structural flooding (of finished floor)
2. Structural flooding (other structures)
3. Roadway flooding or safety hazards
4. Non-structural flooding

The time period for completion of each work order is dependent upon many factors; including the scope of each project, availability of resources, and the total number of work orders written by the inspectors to the Public Service Department during any given period.

6. Stormwater Facilities

Stormwater facilities refer to any device designed to reduce stormwater flows or to reduce the pollutant loads in stormwater. Stormwater facilities include, but are not limited to: detention basins, retention basins, infiltration ponds, oil/water separators and grit chambers. The City of Knoxville assumes no responsibility for the maintenance, installation or improvement of stormwater facilities located on private property. Stormwater facilities located on private property are the responsibility of the property owner(s). In some cases, a neighborhood association may have legally accepted the responsibilities of the stormwater facility.

7. Storm Drainage Material Selection

Please see Policy 16, of Appendix C of this manual.

8. Design Criteria for Stormwater Improvements

Determination of stormwater flow rates within the City of Knoxville shall be in accordance with the NRCS method described in Technical Release 55 (TR-55). The use of standard well-known software programs, such as HEC-1 or HEC-HMS from the U.S. Army Corps of Engineers, is typically beneficial for most computations. Average antecedent moisture conditions (AMC II) shall be used for the calculations. NRCS methods must use 24-hour duration storm with NRCS Type II rainfall distribution for the design frequency. These rainfalls apply to the Knoxville area:

Frequency	1-year	2-year	5-year	10-year	25-year	50-year	100-year	500-year
NRCS rainfall	2.5”	3.3”	4.1”	4.8“	5.5”	6.1”	6.5”	7.6”

In selecting the design frequency storm, the following criteria will be used (listed in order as being progressively more restrictive):

- Longitudinal side drains shall be designed for a 10-year frequency flood, provided that no residential or commercial structures are flooded by a 100-year flood, except as noted below.
- Roadway cross-drains for all but arterial streets shall be designed for a 25-year frequency flood, providing that no residential or commercial structures are flooded by a 100-year flood, except as noted below.
- Roadway cross-drains for arterial streets or a higher street classification shall be designed for a 50-year flood, provided that no structures are flooded by a 100-year flood, except as noted below.
- All bridges, structures, or embankments in floodways designated as part of the Federal Flood Insurance Study shall be designed to pass a 500-year frequency flood without raising the existing 500-year flood profile.

These guidelines have been set up to provide a uniform basis for design projects; however, many retrofit projects have limitations as to the benefits that are produced by the project. Therefore, the City of Knoxville will endeavor to follow the guidelines to the maximum extent practical, both economically and physically.

9. Programs for Funding Special Drainage Projects

The City of Knoxville has two programs which may be used to fund special or large drainage projects throughout the City. Projects funded through either of these programs may include work on private property, when it is for the clearly defined general public welfare.

The first program is the Capital Improvements Projects (CIP) Program. This program is a prioritized, multi-year schedule of public infrastructure improvements, which may include drainage projects. During the fall of each year, the Engineering Department recommends projects for inclusion in the CIP Program. Projects accepted for the program will then be eligible for funding at the beginning of the next fiscal year (i.e. the following July 1).

The second program is the Neighborhood Drainage Program, which was proposed by the Mayor and approved by City Council to address pressing drainage concerns. The program currently provides $250,000 annually for the funding of drainage improvements throughout the City of Knoxville. Consideration for project inclusion in this program is based on, but is not limited to, one or more of the following:

- Total projected cost of the project
- Number of residential or commercial structures that have had floodwater damage
- Frequency of the occurrences

- Impact to adjacent and downstream properties
- Degree of flooding on adjacent streets.

Additional consideration may be given to projects when partial funding can be provided by other sources, such as federal agencies or neighborhood groups.

Policy 08

PARTIAL PLAT PROCESS

Easements for stormwater control and water quality facilities are often required in the development of larger industrial, commercial, and residential properties. Typical properties include shopping centers, office parks, large parking areas, factories, schools, and residential complexes. Preferably, these easements will be established by recorded subdivision plat. However, as described in Section 22.5-20 of the Stormwater and Street Ordinance, in limited situations they may be established by a ***"Partial Plat Process."***

Section 22.5-20 of the Stormwater and Street Ordinance details this process and describes when it may or may not be an option.

In the ***"Partial Plat Process,"*** stormwater easements are established by a written legal document (**"Declaration Document"**) with attached exhibits that describe the location and boundaries of the easements. These exhibits consist of survey drawings and written descriptions and it is the responsibility of the property owner to have the exhibits prepared and certified by a Tennessee Registered Land Surveyor.

Normally, the Law Department shall be responsible for providing the written Declaration Document to me. However, if the Law Department determines that others shall prepare it, then it must be approved by the Law Department before it can be recorded. The combined Declaration Document and exhibits shall be recorded in the Office of the Knox County Register of Deeds.

In the ***"Partial Plat Process,"*** only that ***part*** of the property covering the proposed easement area must be surveyed and included on the drawing exhibit. The drawing shall show the proposed stormwater easements relative to existing property boundaries, all other existing easements, roads, buildings, utilities, drainage ways, streams, and any other natural features or man-made structures that could affect the proposed easements.

Partial plat drawings must be based on actual field surveys that have been conducted to the same standards and that show the same information that would be required for a full subdivision plat. The surveyor shall place his official seal on the drawing, sign and date it, and certify that the survey meets Category I precision standards. Except in unusual cases, and unless approved by the Engineering Department, partial plat survey exhibits shall be referenced to the same north meridian as the pre-existing recorded plat of the property.

The partial plat method involves the property owner, the developer, the surveyor, the City Engineering Department, and the City Law Department. The Law Department shall approve the Declaration Document, and the Engineering Department shall approve the survey exhibits. Partial plat exhibits will be reviewed and approved as quickly as possible but on a first-come, first-served basis with subdivision plats.

To dedicate stormwater easements by the Partial Plat Process, first contact the Technical Services Administrator to verify that it is an option. The Administrator will verify that the Partial Plat Process is an option for this site and, whether or not the application can be accepted. Next, submit a completed application form (attached), a copy of the latest recorded plat of the property, with the instrument number or map cabinet and slide noted thereon, and the $150 non-refundable fee. Payment may be made by credit card or by a check made payable to "City of Knoxville."

Survey exhibits shall not be submitted for review until the proposed easements have been approved by the Engineering Department as part of an engineering design plan. The proposed easements shall conform to those approved design plans.

Survey exhibits shall not be approved until the property owner has signed and recorded a "Covenants for Permanent Maintenance of Stormwater Facilities" document with the Knox County Register of Deeds. (See Policy 02 in the Land Development Manual.)

The following "Owner's Responsibility Note" shall be included on the drawing exhibit:

> "Property owners are responsible for maintaining stormwater facilities on this property. See Covenants Document recorded as Instrument No. _____."

The following note shall also be included on the drawing exhibit:

> "This survey does not subdivide any property."

If a Special Pollution Abatement Permit (SPAP) is required, the Engineering Department's SPAP stamp must be include on the drawing exhibit.

> Special Pollution Abatement Permit
> I, the undersigned, hereby certify that the stormwater quality facilities shown on this plat have been approved by Special Pollution Abatement Permit No. _____, approved by the City of Knoxville's Department of Engineering on the _____ day of _____, 20____.
>
> Signed:_____ Date:_____
> Dept.:_____ Title:_____

Before the final document can be recorded, it must be approved by the Engineering Department and must include the Department of Engineering's approval stamp on map exhibit.

> City of Knoxville Engineering Department
> The Knoxville Engineering Department hereby approves this plat on this the _____ day of _____, 20___
>
> _____
> Engineering Director

A Registered Land Surveyor shall certify, seal, sign, and date all exhibits. On the drawing exhibit, he/she shall certify that the bearing and distance information meets Category I (1:10,000) accuracy standards.

Policy 08 of the Land Development Manual is available on the Engineering Department's website at http://www.knoxvilletn.gov/engineering/. Then click the Land Development Manual link at the top of the page. From that page select Policy 8.

When the Declaration Document and survey exhibits have been approved, the Engineering Department will determine the Register of Deeds' recording fee and inform the surveyor, who shall then provide the Engineering Department a check for the determined amount. The check shall be made payable to the "Knox County Register of Deeds". The Engineering Department shall then record the final total document, advise the surveyor of the recorded instrument number, and provide a paper copy of the recorded document, if needed.

For more information, call the Department of Engineering at (865) 215-2148.

City of Knoxville
PARTIAL PLAT APPLICATION

Date: _____

For office use only --
Application #: _____
City Block #: _____
Date $150 fee paid: _____

To: Director
City of Knoxville Department of Engineering
P.O. Box 1631
Knoxville, TN 37901-1631

From: Undersigned Registered Land Surveyor or Property Owner

RE: Partial Plat Process Request
Tax Parcel(s) (if known) _____
Property Address (if known) _____
Deed References (if known) _____

I have read and understand Section 22.5-20 of the City's Stormwater and Street Ordinance and Policy 08 (Partial Plat Process) in the Engineering Department's current Land Development Manual.

_____
Surveyor's Printed Name

_____
Company

Address
_____
_____

_____ _____
Telephone No. Fax No.

_____
Email Address

_____ _____
Surveyor's Signature* RLS No.

_____
Property Owner's Printed Name

Address
_____
_____

_____ _____
Telephone No. Fax No.

_____
Property Owner's Signature*

* Either the registered land surveyor or the property owner can sign the application.

Policy 09

PERFORMANCE AND INDEMNITY AGREEMENT

(or "Performance Bond")

The Performance and Indemnity Agreement (also commonly known as a performance bond or a construction bond) is a contract between the Principal and the City of Knoxville. The purpose of the agreement is to ensure that the Principal guaranteeing that the construction work affecting the public interest (streets and drainage) is performed in an appropriate manner. Performance bonds are authorized in the Knoxville Stormwater and Street Ordinance in Sections 22.5-5 and 22.5-27 (see Appendix B).

The three parties included in the agreement are:

1. Principal: The party responsible for completing the requirements of the contract according to the design plan approved by the Engineering Department. This person must be the property owner.
2. Guarantor: The party providing the collateral in the form of a Letter of Credit, a Surety Bond, or a Cashier's Check.
3. Beneficiary: The party receiving the benefits should the Principal not comply with the requirements of the Agreement. The beneficiary is always the City of Knoxville, who would receive the full amount of money in a timely manner.

The Performance and Indemnity Agreement is the City's assurance that it will be reimbursed for assuming the costs of uncompleted work not completed by the Principal according to the required specifications and approved plans. The city plans reviewer will determine the dollar amount of the bond based on the actual construction or potential remediation expenses, using guidelines in the Knoxville Stormwater Ordinance.

When the reviewing engineer determines that a Performance and Indemnity Agreement is required for a project, the party submitting the plans will be notified. It is that party's responsibility (and/or the Principal's responsibility) to provide the Stormwater Engineering Division with the following information by mail or fax:

1. Name, address, phone and fax numbers and the contact person for the Principal.
2. The form of guarantee (Cashier's Check, Letter of Credit, Surety Bond).
3. Name, address, phone and fax numbers and the contact person for the Guarantor.

Upon receipt of this information, the Stormwater Engineering Division will then prepare the bond document for execution. A typical blank template is included as part of this policy. It is the Principal's responsibility to obtain all signatures and notarizations. When the document has been fully executed, it is to be returned to the Stormwater Engineering Division with the original signatures and notary seals.

The initial Performance and Indemnity Agreement covers a one-year time period, which is sufficient for most types of site development projects. If the project is not completed according to the approved site plans and the city's standards within that year, the agreement must be extended.

Approximately 60 days before the expiration date, the Principal and Guarantor will be notified by a courtesy letter concerning the bond agreement. It is the Principal's responsibility to contact the Stormwater

Engineering Division to request that the bond be released or extended. The letter contains the names of contact persons within the Stormwater Engineering Division to request either an extension or a release. A second letter is issued approximately 21 days before the expiration date; this timeframe generally requires immediate action by the Principal.

If the Principal feels that the project is complete, a city construction inspector will visit the site to determine if all requirements have been met. Basic general requirements for the release of a performance bond are:

1. Development certification for constructed items being bonded (i.e., accurate as-builts)
2. No erosion problems, structural deficiencies, unsafe conditions or maintenance issues
3. A good stand of grass within required areas

There may be other specific requirements for each project. The city construction inspector will notify the Principal whether all requirements have been met and whether the bond can be considered for release or must be extended. Occasionally, the city construction inspector will decide that the dollar amount of the bond may be reduced but still needs to be extended. At that time the inspector will notify both the Principal and the Stormwater Engineering Division secretary.

If an extension is required, the Principal must notify the Stormwater Engineering Division secretary of his intention. The secretary will prepare the document for execution and then either mail or fax it to the Principal. It is the Principal's responsibility to submit the executed document, along with either an amended Letter of Credit (extending the expiration date) or an extension of the Surety Bond. If the extension agreement has not been received in the Stormwater Engineering Division within ten days of expiration, the initial stages of the collection procedures will be implemented.

PERFORMANCE BONDS - STEP BY STEP INSTRUCTIONS

I. The person submitting site development plans is notified by the city plans reviewer that a Performance and Indemnity Agreement is required. The city plans reviewer determines the dollar amount of the bond using standard estimates.

II. The person submitting the plans (such as the contractor, developer, property owner, project manager, or design engineer) provides written information to the Stormwater Engineering Division listing the Principal, the Guarantor, and form of guarantee (including all contact information such as address and phone numbers).

III. The Stormwater Engineering Division then prepares the bond document for execution and forwards it to the Principal/Guarantor.

IV. The signed and notarized document must be returned with the original signatures and notary seals to the Stormwater Engineering Division secretary.

V. The Principal notifies their financial institution that a letter of credit or cashier's check is required and that the original should be mailed to the Stormwater Engineering Division at the following address: City of Knoxville Engineering Department, 400 Main Street, Suite 480, Knoxville, TN 37902. Alternatively, the Principal may obtain a surety letter from his insurance company, which must be signed by the Principal and an authorized representative of the insurance company. The Principal shall mail the document with original signatures to the same address above (Suite 480), along with proper notarization by a licensed notary public.

VI. Approximately 60 days prior to the expiration date of the Performance & Indemnity Agreement, the Principal and Guarantor are notified by letter that the agreement needs to be extended. A second notification letter is sent approximately 21 days prior to the expiration date, which is more urgent in nature. These letters are sent as a courtesy, and in no way is the City of Knoxville responsible for reminding the Principal of any expiration dates connected with bonds, site development permits, or the construction process in general.

VII. It is the Principal’s responsibility to notify the Stormwater Engineering Division secretary whether an extension agreement is requested, or that the project is complete and needs to be inspected. It is the Principal's responsibility to contact the city construction inspector in preparing for final inspections and punchlist items.

VIII. If the city construction inspector determines that the project is complete and that all necessary documentation has been approved by the Stormwater Engineering Division, a Release Document will be prepared and signed by the City Engineering Department with executed copies to be mailed to the Principal and the Guarantor. At this time the Principal has no further responsibility for administering project construction for items that affect the general public and welfare (as far as the Stormwater Engineering Division is concerned).

IX. If the city construction inspector determines that an extended agreement is required, the Principal must contact the Stormwater Engineering Division to prepare the Extension agreement document and forward it to the Principal for execution. The bond amount shall be unchanged if a bond reduction has not been approved by the Stormwater Engineering Division. The Principal must also notify his bank or insurance institution to provide an amended Letter of Credit or Surety Bond, extending the expiration date to agree with the Extension Agreement.

THIS DOCUMENT IS A BLANK TEMPLATE USED BY STORMWATER ENGINEERING DIVISION IN PREPARING A BOND.

PERFORMANCE AND INDEMNITY AGREEMENT

KNOW ALL MEN BY THESE PRESENTS: That **PRINCIPAL**, **PRINCIPAL,** streetaddress, Knoxville, Tennessee 37___, is held and firmly bound unto the CITY OF KNOXVILLE in the sum of AMOUNT DOLLARS AND NO/100 ($AMOUNT), guaranteed in the form of Letter of Credit Number _____ issued by **_____, SURETY,** to ensure proper grading, construction, drainage and payment of any unpaid and due penalties issued either to the property owner or site contractor at **PROJECTNAME,** located at PROJECTADDRESS, CLT Number _____, Parcel _____. The construction allowed by the issuance of ***Site Development Permit Number,*** ("Permit") includes site grading; construction of roads, sidewalks and retaining walls per approved plans; construction of drainage infrastructure (including pipes, ditches, catch basins and/or junction boxes, detention basins, headwalls, and installation of water quality devices) per approved plans; control of erosion and sediment from the site during construction; stabilization of disturbed areas after construction; street lighting; work within the city right-of-way; the development certification (including as-built plans); and "Covenants for Permanent Maintenance of Stormwater Facilities" referenced on the final plat.

Name of Bank

As a condition of the issuance of this Permit, **PRINCIPAL**, hereby covenants and agrees that all work being performed on the above described property shall be performed in a workmanlike manner, shall be completed on or before _____, and shall conform with the site and drainage plans reviewed and approved by the Department of Engineering, all applicable provisions of the Knoxville City Code, and adopted regulations of the Engineering Department.

PRINCIPAL, further agrees to maintain all public streets, sidewalks, and rights-of-way and downstream drainage facilities in the condition that existed prior to construction.

If the work required in the permit is not completed in accordance with the approved plans to the satisfaction of the Engineering Department, or if the street, rights-of-way and downstream drainage facilities are not maintained to their pre-construction condition, or if the work is not completed by _____, or within a written extension thereof granted by the Engineering Department the Letter of Credit in the amount of $AMOUNT described herein shall be forfeited to the City of Knoxville to ensure both the satisfactory completion of the work required by the Permit and the satisfactory repair and/or maintenance of the streets, sidewalks, rights-of-way and downstream facilities to pre-construction conditions.

The Department of Engineering will call in the Letter of Credit ten (10) days prior to its expiration date, unless the Department has determined that it will release the Letter of Credit and no extension is required.

Upon completion of the requirements in this Permit and this Agreement to the satisfaction of the Engineering Department, the City will release the Principal's guarantee and relieve the Principal of further responsibility.

PRINCIPAL, agrees that this Performance and Indemnity Agreement shall be governed by the laws of the State of Tennessee.

This the _____ day of _____ 20___.

PRINCIPAL:
PRINCIPAL

BY: _____
Signature

NAME: _____

TITLE: _____

CITY OF KNOXVILLE

_____
BRENTLY J. JOHNSON
ENGINEERING PLANNING CHIEF

STATE OF _____

COUNTY OF _____

Before me, _____, of the state and county mentioned, personally
Name of the Notary Public

appeared _____, with whom I am personally acquainted (or proved to me
Name of Person Representing the Principal

on the basis of satisfactory evidence), and who, upon oath, acknowledged himself/herself to be

_____ (or other officer authorized to execute the instrument) of
Title of Person Representing the Principal

_____, the within named bargainor, a _____,
Principal Company Name Type of organization

and that such _____ or officer as such _____,
Title of Person Representing the Principal Title of Person Representing the Principal

executed the foregoing instrument for the purpose therein contained, by personally signing the

name of the _____ as _____.
Type of organization Title of Person Representing the Principal

WITNESS, my hand and seal, at office, this _____ day of _____ 20__.

_____
NOTARY PUBLIC (Signature)

MY COMMISSION EXPIRES:

_____

Policy 10

RETAINING WALLS

Retaining walls located on private property are the responsibility of the property owner. The property owner (or his representative) must ensure that the retaining wall is properly designed and constructed. The property owner is responsible for maintenance and repairs of all retaining walls on his property. Developers are not allowed to construct retaining walls of any size within public right-of-way or in areas that will be dedicated for public right-of-way.

All plans, profiles, cross-sections and calculations must be prepared and sealed by a registered professional engineer licensed to practice in the state of Tennessee. The professional engineer must have sufficient education and experience to design a retaining wall that ensures the safety of the general public. The professional engineer shall also have complete control of all aspects of the design and preparation of plans and calculations. Approval of necessary plans and calculations will not transfer or share responsibility of the retaining wall design to the City of Knoxville.

In order to obtain a Site Development Permit for construction of retaining walls 4 feet or taller on private property, the following information must be submitted to the Stormwater Engineering Division:

- A plan sheet that includes existing and proposed contours, drainage features, buildings, property lines, proposed wall locations, public easements, parking facilities and streets.
- A typical section showing wall and footing dimensions, backfill slopes, finished grade elevations, steel reinforcement details, weephole locations, and subsurface drainage systems.
- Engineering calculations for the design of the wall, noting all assumptions such as concrete and steel reinforcement strengths, soil parameters, surcharges, bearing pressures, safety factors for bearing capacity, overturning, and sliding. The minimum required factors of safety are as follows:

  Bearing Capacity = 3.0

  Overturning = 2.0

  Sliding = 1.5

If the retaining wall on private property is 4 feet or taller and has the potential to affect public right-of-way, the following two additional requirements must be met:

- A geotechnical report must be included with the retaining wall design and calculations as part of the Site Development Permit submittal.
- A letter from a qualified Geotechnical Engineer must be included with the Development Certification submittal confirming that the backfill and foundation materials used in the actual construction meet the requirements of the original design.

The professional engineer is responsible for all aspects of the retaining wall design. The use of standard designs from reputable manufacturers is allowable and even encouraged, but the professional engineer who stamps the drawings and computations is responsible for the retaining wall design. Inadequate information from geotechnical investigations and reports will not excuse the engineer's responsibility or liability.

Third-Party Inspections – The Engineering Director may require a proposed retaining wall to be inspected by an independent geotechnical firm or engineer during the construction process. Typical criteria for walls which must receive third-party inspections may include:

- Vicinity to public streets and roads.
- Vicinity to permanent residences, such as houses, apartments, or condos.
- Modular construction, rather than cast-in-place concrete.
- Heights over 10' or located near steep slopes.
- Potential for groundwater or surface runoff problems.

The independent geotechnical firm or engineer will submit inspection reports at agreed-upon intervals based on the construction schedule, size and type of retaining wall, and types of soil testing involved. Inspection reports must demonstrate that the retaining wall is constructed safely and will function as designed. In some cases, construction modifications may be needed if the soil design parameters are insufficient.

Geotextile-Reinforced Walls – There have been several instances of geotextile-reinforced walls that have failed in the last few years on private property and public rights-of-way. It is suspected that insufficient soil compaction, poor backfill, and inadequate soil preparation are the chief culprits. The Engineering Department is very reluctant to allow these types of retaining walls on private property over 4' tall with the potential to affect public right-of-way or permanent residences. Geotextile-reinforced walls in these instances will be reviewed on a case-by-case basis. Performance bonds or other types of guarantees may be needed to ensure adequate maintenance and repair.

Here are some recommendations and advice concerning retaining wall design and construction:

- As an example for concrete gravity retaining walls, see TDOT standard detail EL-W-2 at: www.tdot.state.tn.us/Chief_Engineer/engr_library/design/Std_Drwg_Eng.htm This drawing shows typical features such as: weep holes, expansion joints, contraction joints, granular backfill, waterstops, and perforated drains.
- Where possible, design retaining walls so that vehicular traffic and construction equipment will not provide surcharge loading at the top of the walls. Surcharged loads cause a large increase in the construction cost of retaining walls. In addition, surcharged loads are hard to predict, hard to control and monitor, and cause repeated stress motions.
- In some types of walls, the factors of safety may not be clearly stated. However, the design engineer should carefully investigate all claims made by retaining wall manufacturers. The amount of expected settlement can be estimated based solely on the weight of materials and the soil properties.

Policy 11

SEDIMENT DISPOSAL FOR DETENTION BASIN MAINTENANCE

When properly designed, stormwater detention basins will accumulate significant quantities of sediment over time. Sediment gradually reduces the available stormwater storage capacity of the basin. A rule of thumb is that approximately 1% of the storage volume capacity associated with the 2-year design storm can be lost annually. Therefore, approximately 20% of a pond's total storage capacity can be lost within 20 years.

However, the actual sediment accumulation rate is dependent upon a number of factors including watershed size, facility sizing, upstream construction, nearby industrial activities and land uses, numbers of leaking vehicles, use of sand and salt during winter, etc. Thick grass and vegetation will retain sediment and silt at a faster rate.

In addition to long-term maintenance, sediment disposal is usually necessary during the construction process. Erosion control practices and devices are not totally effective at reducing and eliminating all sediment. The developer must ensure that the designed detention volume has been restored and that all graded surfaces have been completely stabilized at the end of construction.

The sediment basin shall be inspected on a regular basis to determine the impact of existing sedimentation on the capacity of the basin. Inspections should occur during dry weather and wet weather conditions. In general, remove sediment prior to significant accumulations using a combination of equipment methods and hand shoveling. Typical intervals for sediment removal will be every 5 to 7 years. Typical intervals for sediment removal for a sediment forebay or other pretreatment settling basin will be once a year.

Assessment and Disposal:

1. If the detention basin meets any of the following criteria, then contact the Tennessee Department of Environment and Conservation (TDEC) for further regulations and recommended disposal guidelines.
    a. Known contaminants are contained in the stormwater runoff or the sediment.
    b. The detention basin receives stormwater runoff from an industrial site.
    c. The detention basin receives stormwater runoff from a fueling center.
    d. The detention basin receives stormwater runoff from one or more commercial businesses with a total parking area of at least 120,000 square feet or 400 parking spaces.
    e. The Engineering Director has reason to believe that contaminants are present based upon scientific or engineering information.

    In all cases, treat sediment from detention basins as potentially hazardous soil until proven otherwise. Sediments should be sampled and identified before removal and disposal operations proceed. Contact the local office of TDEC - Division of Water Pollution Control (865-594-6035) to discuss special disposal procedures.

2. If the detention basin does not meet any of the above criteria, or if the sediment has been tested and is determined to be free of contamination, then the following disposal practices are allowed.
   a. Disposal at a Class III or Class IV landfill.
   b. Use for fill material, cover material or land spreading on the project site.
   c. Other disposal materials as approved by the Engineering Director.

All sediment which is disposed onsite must be prevented from entering the sediment basin, any drainage channel or culvert, natural creeks or streams, or any other component of the stormwater drainage system.

The following table is a list of local landfills that may accept sediment. Contact each landfill for costs and regulations associated with sediment disposal. This list is not intended to be complete or inclusive.

Landfill	Location	Phone	Type
Burnett-Armstrong Demolition Landfill	3330 Delrose Avenue Knoxville, Tennessee	865-525-6645	Demolition
Poplar View Class III/IV Landfill	7826 Rutledge Pike Knoxville, Tennessee	865-525-7720	Demolition
Ridgeview Demolition Landfill	8723 Oak Ridge Highway Knoxville, Tennessee	865-690-9436	Demolition
Yarnell Demolition Landfill, LLC	1550 Lamon Quarry Road Knoxville, Tennessee	865-470-0023	Demolition
Chestnut Ridge Landfill & Recycling Center	240 Fleenor Mill Road Heiskell, Tennessee (in Anderson County)	865-457-7810	Sanitary

Policy 12

SINKHOLE DEVELOPMENT

Introduction and Overview -

A sinkhole is a naturally occurring surface depression which occurs primarily in limestone regions and is usually denoted with hachured lines on a contour map, or is otherwise part of a closed watershed system. A sinkhole typically receives surface stormwater runoff, and may be directly or indirectly linked to an underground cavern system or groundwater table. For the purposes of regulating site development, a sinkhole is a minimum of 2' deep when measured from the lowest part of the depression to the overflow lip.

Sinkholes are a common feature in Knoxville and throughout east Tennessee. The predominant geology in Knoxville is a system of parallel ridges and valleys that run in a southwest-northeast direction. The ridges typically are a combination of folded shales, sandstones and limestones. The valleys contain soft shales, limestones and clay soils.

It is not possible to determine the condition of a sinkhole by visual inspection. Even if a sinkhole appears to be well-drained based on repeated observations and measurements, it may still close tomorrow for no apparent reason. It is suspected that many sinkholes become nonfunctioning due to construction activities. Construction heavy equipment and/or dynamite may have changed drainage characteristics for many sinkholes along I-40 and I-640 in previous decades. Excess silt and sediment can also clog sinkholes and make them nonfunctioning.

Historically in decades past, some sinkholes have been used to dump trash, liquid wastes, etc. This is particularly harmful to the environment due to the direct connection to groundwater tables and subsurface drainage. Trash, debris and sediment will clog the sinkhole throat and eventually reduce the drainage capability of the sinkhole. Most water entering a sinkhole will eventually reappear in a nearby creek or stream.

Sinkholes are typically not reliable as a primary drainage system. Every sinkhole behaves differently under changing conditions. Saturated ground conditions and high groundwater tables will cause a sinkhole to drain very poorly. It is even possible for groundwater to flow upwards and fill a sinkhole. Sinkholes are prone to settlement and generally do not have suitable soil foundations.

Sinkhole Requirements -

1. *(For site development on a property that contains a sinkhole or partially contains a sinkhole)* -- Engineering Department will require a copy of a Class V Injection Well Permit and/or an Aquatic Resource Alteration Permit (ARAP) prior to approving a site development permit. These permits are issued by the Tennessee Department of Environment and Conservation (TDEC) to protect Waters of the State. After reviewing the TDEC permit, the Engineering Department may require additional information relating to the structural integrity and flood protection. When existing or documented flooding problems are present, the Engineering Director may require additional measures such as detention, conveyance facilities, or other stormwater management solutions to reduce adverse impacts to the subject development or to other properties.

Requirements #2 through #6 apply to site development projects that must provide stormwater detention for the 1-year, 2-year, 5-year, 10-year, 25-year and 100-year NRCS storms as required by Section 22.5-23 of the Stormwater and Street Ordinance:

A. *Road construction containing one-half acre or more of impervious surface.*

B. *Commercial, industrial, educational, institutional, or recreational developments containing one acre or more of disturbed area.*

C. *Single-family or duplex residential development containing at least five acres of disturbed area or at least five lots.*

D. *Any development containing one-half acre or more of additional impervious area.*

E. *Any redevelopment that causes the improvement of 50% of the assessed value of the lot, building, or lot use.*

Requirements #2 through #6 must include calculations to demonstrate that the requirement is met. Volume computations must be performed using regular intervals, preferably using the conic volume formula shown on page ST-11-13 of the Knoxville BMP Manual. All hydrologic and hydraulic computations must be prepared by a registered engineer proficient in the field of hydrology and hydraulics, and licensed to practice engineering in the State of Tennessee. Detention and routing computations shall meet the general requirements contained in ST-10, ST-11 and ST-12 of the Knoxville BMP Manual.

---

2. *(For site development on a property that contains a sinkhole, partially contains a sinkhole or ultimately drains to a sinkhole)* -- Provide calculations that show that the 100-year, 24-hour NRCS design storm will not flood any structures assuming plugged conditions for the sinkhole (0 cfs outflow). These calculations must include the entire contributing watershed area for the sinkhole. A sinkhole easement, similar to a detention easement as defined in Policy 05, must be dedicated at least 5' horizontally outside the highest closed contour defined by the sinkhole lip.

3. *(For site development on a property that partially contains a sinkhole)* -- Provide calculations that show no rise in water surface elevations between the predeveloped and postdeveloped 100-year, 24-hour NRCS design storm, assuming plugged conditions for the sinkhole (0 cfs outflow). These calculations must include the entire contributing watershed area for the sinkhole. A sinkhole easement, similar to a detention easement as defined in Policy 05, must be dedicated on the property being developed at least 5' horizontally outside the highest closed contour defined by the sinkhole lip. In some cases, a rise in the 100-year water surface elevation is allowable if all parties with ownership of the sinkhole agree to allow the rise with written documentation.

4. *(For site development on a property within a Critical Sinkhole Watershed)* -- Provide calculations that show total retention of the difference between the predeveloped and postdeveloped 100-year, 24-hour NRCS design storms. These calculations must include the entire contributing watershed area for all designed retention basins and sinkholes.

5. *(For site development on a property within a Critical Sinkhole Watershed)* -- Provide calculations that show that the postdeveloped 100-year, 24-hour NRCS peak flow rate does not exceed the predeveloped 100-year, 24-hour NRCS peak flow rate. In basins or subbasins with a documented historical drawdown time, it may be acceptable to assume drawdown if the documented value is at least 1.5 times larger than the drawdown time for the region. In general, advanced subsurface testing must be performed and certified by a professional engineer registered in the state of Tennessee with a demonstrated expertise in hydrogeology. Subsurface testing shall reasonably determine the range of outflows under a variety of design conditions.

6. *(For any site development that drains to any sinkhole or retention basin within a Critical Sinkhole Watershed)* -- Subsurface testing shall reasonably determine the range of outflows under a variety of design conditions. In general, advanced subsurface testing must be performed and certified by a professional engineer registered in the state of Tennessee with a demonstrated expertise in hydrogeology. If it is proven by geotechnical testing that the soil does not percolate, then a drawdown orifice may be used. This is evaluated by a case-by-case basis. The drawdown rate will be 0.05 cfs for drainage areas 2.5 acres and less, or 0.02 cfs per acre for larger drainage areas.

Critical Sinkhole Watersheds -

The following areas contain sinkholes and are labeled as critical watersheds. These areas can be viewed on maps at the Engineering Department, 4th Floor City County Building, during normal working hours.

(1) The entire watershed for Ten Mile Creek (since the entire creek drains into a huge sinkhole near the intersection of Ebenezer Road and Southern RR crossing)

(2) Sinking Creek

(3) Emily Avenue and Timothy Avenue

(4) Harrell Hills subdivision (near Cranberry Drive, Clairmont Drive, and Gaines Road) Prosser Road #1 (between Cherry Street and immediately north of the railroad crossing)

(5) Prosser Road #2 (approximately halfway between Knoxville Zoo Drive and Magnolia Avenue)

(6) Pamela Lane

(7) All areas draining to a sinkhole

(8) Any area of known flooding where deemed necessary by the Engineering Director

Definitions -

Baseflow The quantity of water in a stream or creek that is contributed by groundwater and is not directly associated with surface stormwater runoff.

Closed A sinkhole that no longer drains is said to be closed. An open sinkhole can become closed for any number of reasons: sediment and debris; nearby construction activity with heavy equipment or dynamite; changing subsurface conditions; underground collapse; high groundwater tables; etc.

Dolomite A soluble rock consisting mainly of magnesium carbonate and calcium carbonate. Classified as sedimentary rock; common throughout Knoxville.

Interflow Movement of groundwater from one location to another; often accounting for springs and stream baseflow.

Karst A region with porous limestone that may also contain other soluble rocks and minerals such as carbonates. A karst region may contain sinkholes, underground caves, springs, disappearing streams, subsurface cavities or voids, and natural streams with high baseflow characteristics.

Limestone A soluble rock consisting mainly of calcium carbonate. Classified as sedimentary rock; common throughout Knoxville in both ridges and valleys.

Open A sinkhole that drains well is said to be open. It is possible for a closed sinkhole to become open for any number of reasons: dissolution of limestone or other soluble rock, underground collapse, settlement, etc.

Resurgence Groundwater that flows out of a sinkhole, due to high groundwater tables or perched springs. A sinkhole may or may not experience resurgence at different times for different storm events.

Sinkhole Lip The portion of the sinkhole perimeter where stormwater first begins to overflow. This elevation is likely to be flooded for large storms and high-intensity rainfalls.

Throat The area of a sinkhole where surface stormwater drains into the ground to become subsurface water. Normally located at the lowest part of the depression, but not necessarily.

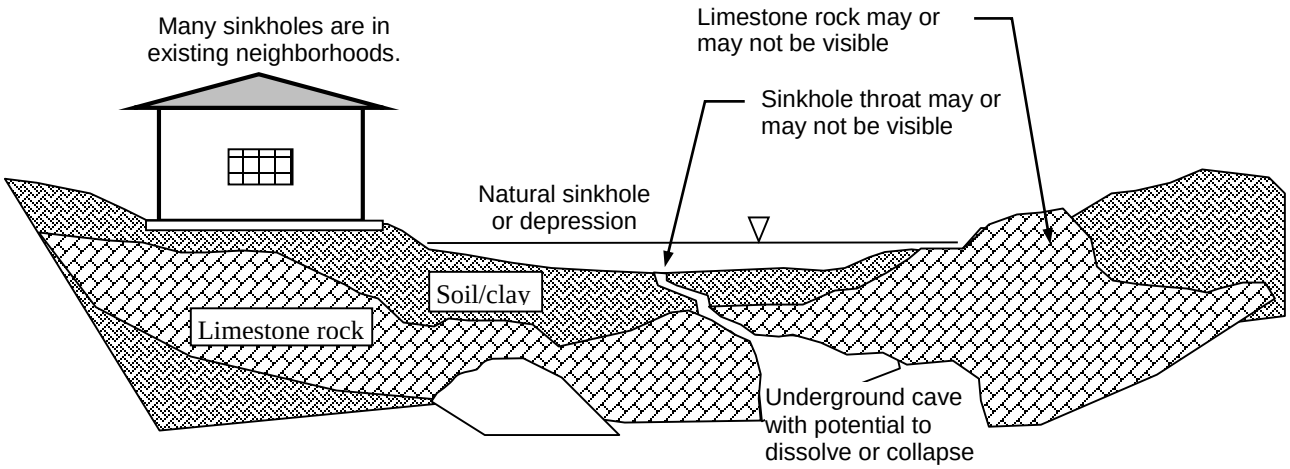

Increasing stormwater runoff to a natural depression may increase sinkhole formation by further dissolving limestone. Even if the amount of stormwater runoff has not been increased, stormwater quality treatment is necessary to prevent pollutants from entering groundwater and to reduce potential pH changes and chemicals within stormwater runoff.

NOT TO SCALE

Figure 1 -- Typical Concerns of Sinkholes in Residential Areas

Policy 14

STORMWATER ENFORCEMENT RESPONSE PLAN

In compliance with the National Pollution Discharge Elimination System Permit # TNS068055, the City of Knoxville is required to prohibit and enforce non-stormwater discharges to the municipal separate storm drain system. This was initially accomplished by the Knoxville Stormwater and Street Ordinance in 1997. To fulfill the remainder of the NPDES requirements with regards to enforcement, these guidelines have been adopted by the Water Quality Section and other personnel within the Stormwater Engineering Division.

Upon discovery of a violation of Chapter §22.5 of the City Code, the Engineering Director or his representative may employ any combination of the enforcement actions below, and to escalate enforcement responses where necessary to address persistent non-compliance, repeat or escalating violations, or incidents of major environmental harm.

A) Verbal Warnings – The site inspector may issue verbal warnings that specify the nature of the violation, any required corrective action, and a time to comply with verbal warning.

B) Written Notices - The Engineering Director or his representative may issue a Notice of Violation (NOV) to the responsible party and/or property owner where the violation has occurred. The NOV shall typically include:

1. The description and nature of the violations to the City Code.
2. The location of where the violations have occurred.
3. A description of the ordered repair or remediation work which is necessary to comply with the Knoxville Stormwater and Street Ordinance (Chapter 22.5 of the City Code).
4. The latest date that the repair or remediation work must be completed. This becomes the expiration date of the NOV.
5. Signature of the person issuing the NOV.

The NOV shall require that any violation of the City Code must stop immediately, unless doing so would otherwise endanger the public safety or welfare. The Engineering Director will not allow an extension of time for NOVs that substantially harm natural streams and the environment.

The Engineering Director may review a written request for an extension of time, if there is sufficient evidence of hardship. Considerations which could allow for an extension of time may include:

- Structural modifications or any repair work (such as sanitary sewer laterals) for which new design plans are usually not necessary. The Engineering Director may typically allow a maximum of 14 days for these projects to occur.
- New structures or major structural modifications which require a coordinated effort for design planning. The Engineering Director may typically allow a maximum of 60 days for large projects to occur.

- New structures or any structural modifications that require state or federal permits to complete the project. The Engineering Director may allow a maximum of 180 days for large projects with substantial elements of design work.

C) Citations with Administrative Penalties - Any person violating the provisions of the City of Knoxville Stormwater and Street Ordinance may be assessed a civil penalty by the City of Knoxville of not less than $50 per day and not more than $5,000 per day for each day of violation. Each day of violation shall constitute a separate violation. After the NOV has been issued, the property owner, developer and/or responsible party will be notified by mail of the violations and the ordered repairs.

The NOV typically does not include the amount of any fines or penalties. All fines and penalties will be determined by the Engineering Director, and are generally assessed after the NOV expires. The Director will consider the following criteria when assessing penalties:

1. The amount of damage to the public health and the environment.
2. The amount of effort put forth by the violator to remedy this violation.
3. The economic benefit gained by the violator for not obeying the law.
4. Whether the civil penalty imposed will be a substantial economic deterrent to the illegal activity.
5. The amount of penalty established by ordinance or resolution for specific categories of violations.
6. Any unusual or extraordinary enforcement costs incurred by the city.
7. Any equities of the situation that outweigh the benefit of imposing any penalty or damage assessment.

The Director may also consider these additional criteria for determining penalties of violations:

8. Willingness and cooperation of the violator to remedy this violation and remediate any damage.
9. Whether the violation was intentional, negligent, or accidental.
10. Costs incurred by the City of Knoxville for any administrative or remediation costs, including the investigative and monitoring activities. This is often computed in terms of number of man-hours necessary to deal with the problem.
11. Prior violations for this violator or at this location.

In addition to the civil penalty above, the City of Knoxville may recover all damages proximately caused by the violator to the city, which may include any reasonable expenses and attorney's fees incurred with investigating, enforcing or correcting violations. The City may bring legal action to enjoin any continuing violation, and the existence of any other remedy, at law or in equity, shall be no defense to any such actions. The remedies set forth in this policy shall be cumulative, not exclusive, and it shall not be a defense to any action, civil or criminal, that one or more of the remedies set forth herein has been sought or granted.

Any person aggrieved by the imposition of a civil penalty or damage assessment, as provided by the Knoxville Stormwater and Street Ordinance (Chapter 22.5), may appeal said penalty or damage assessment to the Board of Environmental Appeals. The appeal shall be in writing and filed with the City of Knoxville Law Department within 30 days after the damage assessment or civil penalty is served in any manner authorized by law.

Upon receipt of an appeal, the Board shall hold a public hearing within 60 days, or a later date mutually agreed upon by all parties. At least 10 days prior to the hearing, the Board shall publish time, date and location of the public hearing in a daily paper of general publication. At least 10 days prior to the hearing, notice shall be provided to the aggrieved party at the address provided at the time of appeal. Any alleged violator may appeal a decision of the Board of Environmental Appeals pursuant to the provisions of Title 27, Chapter 8 of the Tennessee Code Annotated.

In the event that an assessed civil penalty is due and unpaid, the City of Knoxville may collect the monies due from the surety bond, cashier's check, letter of credit or other security supplied to ensure the proper completion of the project.

D) Stop Work Orders - The Engineering Director or his representative may issue a Notice of Violation (NOV) for ceasing all activities on site (Stop Work Order, SWO) to the responsible party and/or property owner where the violation has occurred and the violation is egregious or where the above means have failed to bring the site into compliance.

E) Withholding of Plan Approvals or Other Authorizations - When violations are known to exist, the Engineering Director or his representative may withhold the approval of all plans the responsible party or property owner submits.

F) Additional Measures - The City of Knoxville may also use other escalated measures provided under local legal authorities. The City may perform work necessary to improve erosion control measures and collect the funds from the responsible party in an appropriate manner, such as collecting against the project's bond or directly billing the responsible party to pay for work and materials. The City may also increase permitting fees for any future developments.

Policy 14

STORMWATER ENFORCEMENT RESPONSE PLAN

In compliance with the National Pollution Discharge Elimination System Permit # TNS068055, the City of Knoxville is required to prohibit and enforce non-stormwater discharges to the municipal separate storm drain system. This was initially accomplished by the Knoxville Stormwater and Street Ordinance in 1997. To fulfill the remainder of the NPDES requirements with regards to enforcement, these guidelines have been adopted by the Water Quality Section and other personnel within the Stormwater Engineering Division.

Upon discovery of a violation of Chapter §22.5 of the City Code, the Engineering Director or his representative may employ any combination of the enforcement actions below, and to escalate enforcement responses where necessary to address persistent non-compliance, repeat or escalating violations, or incidents of major environmental harm.

A) Verbal Warnings – The site inspector may issue verbal warnings that specify the nature of the violation, any required corrective action, and a time to comply with verbal warning.

B) Written Notices - The Engineering Director or his representative may issue a Notice of Violation (NOV) to the responsible party and/or property owner where the violation has occurred. The NOV shall typically include:

1. The description and nature of the violations to the City Code.
2. The location of where the violations have occurred.
3. A description of the ordered repair or remediation work which is necessary to comply with the Knoxville Stormwater and Street Ordinance (Chapter 22.5 of the City Code).
4. The latest date that the repair or remediation work must be completed. This becomes the expiration date of the NOV.
5. Signature of the person issuing the NOV.

The NOV shall require that any violation of the City Code must stop immediately, unless doing so would otherwise endanger the public safety or welfare. The Engineering Director will not allow an extension of time for NOVs that substantially harm natural streams and the environment.

The Engineering Director may review a written request for an extension of time, if there is sufficient evidence of hardship. Considerations which could allow for an extension of time may include:

- Structural modifications or any repair work (such as sanitary sewer laterals) for which new design plans are usually not necessary. The Engineering Director may typically allow a maximum of 14 days for these projects to occur.
- New structures or major structural modifications which require a coordinated effort for design planning. The Engineering Director may typically allow a maximum of 60 days for large projects to occur.

- New structures or any structural modifications that require state or federal permits to complete the project. The Engineering Director may allow a maximum of 180 days for large projects with substantial elements of design work.

C) Citations with Administrative Penalties - Any person violating the provisions of the City of Knoxville Stormwater and Street Ordinance may be assessed a civil penalty by the City of Knoxville of not less than $50 per day and not more than $5,000 per day for each day of violation. Each day of violation shall constitute a separate violation. After the NOV has been issued, the property owner, developer and/or responsible party will be notified by mail of the violations and the ordered repairs.

The NOV typically does not include the amount of any fines or penalties. All fines and penalties will be determined by the Engineering Director, and are generally assessed after the NOV expires. The Director will consider the following criteria when assessing penalties:

1. The amount of damage to the public health and the environment.
2. The amount of effort put forth by the violator to remedy this violation.
3. The economic benefit gained by the violator for not obeying the law.
4. Whether the civil penalty imposed will be a substantial economic deterrent to the illegal activity.
5. The amount of penalty established by ordinance or resolution for specific categories of violations.
6. Any unusual or extraordinary enforcement costs incurred by the city.
7. Any equities of the situation that outweigh the benefit of imposing any penalty or damage assessment.

The Director may also consider these additional criteria for determining penalties of violations:

8. Willingness and cooperation of the violator to remedy this violation and remediate any damage.
9. Whether the violation was intentional, negligent, or accidental.
10. Costs incurred by the City of Knoxville for any administrative or remediation costs, including the investigative and monitoring activities. This is often computed in terms of number of man-hours necessary to deal with the problem.
11. Prior violations for this violator or at this location.

In addition to the civil penalty above, the City of Knoxville may recover all damages proximately caused by the violator to the city, which may include any reasonable expenses and attorney's fees incurred with investigating, enforcing or correcting violations. The City may bring legal action to enjoin any continuing violation, and the existence of any other remedy, at law or in equity, shall be no defense to any such actions. The remedies set forth in this policy shall be cumulative, not exclusive, and it shall not be a defense to any action, civil or criminal, that one or more of the remedies set forth herein has been sought or granted.

Any person aggrieved by the imposition of a civil penalty or damage assessment, as provided by the Knoxville Stormwater and Street Ordinance (Chapter 22.5), may appeal said penalty or damage assessment to the Board of Environmental Appeals. The appeal shall be in writing and filed with the City of Knoxville Law Department within 30 days after the damage assessment or civil penalty is served in any manner authorized by law.

Upon receipt of an appeal, the Board shall hold a public hearing within 60 days, or a later date mutually agreed upon by all parties. At least 10 days prior to the hearing, the Board shall publish time, date and location of the public hearing in a daily paper of general publication. At least 10 days prior to the hearing, notice shall be provided to the aggrieved party at the address provided at the time of appeal. Any alleged violator may appeal a decision of the Board of Environmental Appeals pursuant to the provisions of Title 27, Chapter 8 of the Tennessee Code Annotated.

In the event that an assessed civil penalty is due and unpaid, the City of Knoxville may collect the monies due from the surety bond, cashier's check, letter of credit or other security supplied to ensure the proper completion of the project.

D) Stop Work Orders - The Engineering Director or his representative may issue a Notice of Violation (NOV) for ceasing all activities on site (Stop Work Order, SWO) to the responsible party and/or property owner where the violation has occurred and the violation is egregious or where the above means have failed to bring the site into compliance.

E) Withholding of Plan Approvals or Other Authorizations - When violations are known to exist, the Engineering Director or his representative may withhold the approval of all plans the responsible party or property owner submits.

F) Additional Measures - The City of Knoxville may also use other escalated measures provided under local legal authorities. The City may perform work necessary to improve erosion control measures and collect the funds from the responsible party in an appropriate manner, such as collecting against the project's bond or directly billing the responsible party to pay for work and materials. The City may also increase permitting fees for any future developments.

Policy 15

STORMWATER MESSAGE FOR CURB IRONS AND MANHOLE LIDS

The City of Knoxville required that developers follow this policy beginning January 2001. The policy is also reflected in the following City of Knoxville standard details:

COK-01	Area Drain
COK-02	Traffic-Bearing Manhole Frames and Covers
COK-10	Type "B" Cast Iron Frame, Grate and Inlet
COK-11	Type "B" Cast Iron Frame, Grate and Inlet for Mountable Curbs

All new curb irons, grate inlets, yard inlets and solid stormwater manhole covers must have an educational message permanently attached or cast directly into the structure. This message must be specified on the site development plans for all standard catch basins and stormwater manhole covers. Acceptable messages include any combination of the following, or an approved equivalent message:

1. NO DUMPING <icon> DRAINS TO RIVER (or STREAM)
2. DUMP NO WASTE <icon> DRAINS TO RIVER (or STREAM)
3. DO NOT POLLUTE <icon> DRAINS TO RIVER (or STREAM)

An environmental icon (typically a fish) is preferred but not mandatory. Lettering should be of sufficient size to be easily readable. Each of the following major foundries were notified of this new regulation in 2000: Acheson, Deeter, East Jordan Iron Works, John Bouchard & Sons, NEENAH, and Vulcan. Additional manufacturers were notified in November 2001, to include the commonly used stormwater treatment devices in the Knoxville area. Grates for catch basins and yard inlets must also have the environmental message cast directly into the metal.

Stormwater stenciling of the environmental message (commonly known as the "Blue Thumb" program) is only for existing catch basins in areas with likely dumping. Having the environmental message cast directly into curb irons and manhole lids will reduce maintenance effort, paint costs, and possible paint spillage associated with the Blue Thumb program.

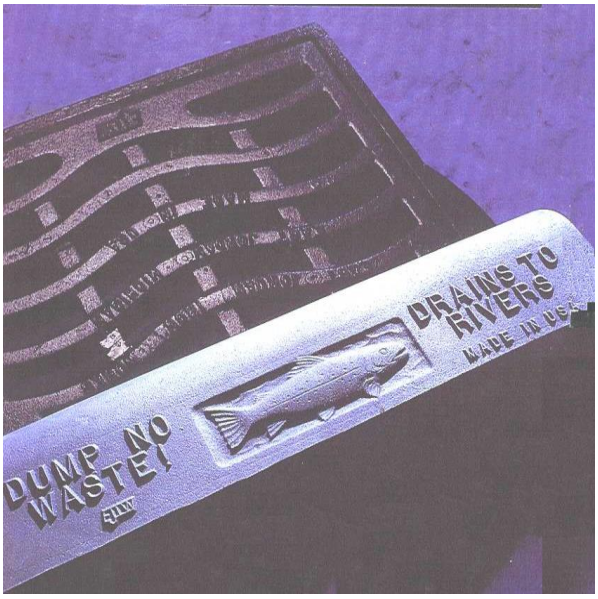

Policy 16

STORMWATER PIPE MATERIALS

In order to reduce flooding, promote adequate drainage, and reduce maintenance, the City of Knoxville requires certain pipe materials depending upon usage and location of the pipes. Material for pipe used for conveyance of stormwater within the City of Knoxville shall be in accordance with the following:

- Reinforced concrete pipe (RCP), double-walled high-density polyethylene pipe (HDPE), corrugated double-walled polyvinyl chloride pipe (PVC), corrugated metal pipe (CMP) and non-reinforced concrete pipe (NRCP) may be used to convey onsite stormwater runoff (stormwater runoff generated by the subject property including areas such as buildings, parking lots, etc.).
- Reinforced concrete pipe (RCP) is required for all detention basin outlet structures and for all stormwater outlet pipes that drain through the berm of a detention pond (or water quality facility) continuing to its terminus or the connection to a downstream system.
- Underground detention facilities that do not have a berm associated with their construction may use HDPE for the pipe material downstream of the outlet structure provided that in the event of a failure of the pipe, no offsite properties will be adversely affected.
- Reinforced concrete pipe (RCP) is required when stormwater systems carry water from offsite areas (stormwater runoff generated by areas other than the subject property, where the runoff drains across the subject property) or when there is a potential to cause flooding or damage to adjacent properties. RCP is also required for all stormwater systems located within new residential developments (includes residential condominium developments).
- Stormwater pipes installed under City streets and/or Joint Permanent Easements (JPEs) shall be reinforced concrete pipe (RCP). Stormwater pipes within the roadway prism of City streets and JPEs, but not under the pavement, shall also be of RCP.
- Any stormwater pipe/system that is installed with intent of dedicating to the City, whether inside or outside of the right-of-way, shall be constructed with reinforced concrete pipe (RCP).
- Existing residential subdivisions that have a roadside ditch and driveway pipe stormwater system may use reinforced concrete pipe (RCP), double-walled high-density polyethylene pipe (HDPE), corrugated double-walled polyvinyl chloride pipe (PVC), corrugated metal pipe (CMP) and non-reinforced concrete pipe (NRCP) as desired by the responsible agency, corporation, or individual. RCP is required underneath any driveways or entrances that are heavily traveled.

For the situations referred to above where reinforced concrete pipe (RCP) is required, the Engineering Department may allow ductile iron pipe (DI) to be substituted for RCP when site limitations exist.

For pipe installations proposed through railroad right-of-way where the railroad requires a pipe material other than the City of Knoxville's standard criteria, the Engineering Director has the authority to approve an alternative pipe material.

Installation Standards

All stormwater pipes must be installed correctly with adequate pipe bedding, backfill and stormwater joint techniques. See the following for proper installation practices:

Reinforced Concrete Pipe (RCP) – ASTM C 1479-01

Double Walled High-Density Polyethylene (HDPE) – ASTM D 2321

Corrugated Double Walled Polyvinyl Chloride (PVC) – ASTM D 2321

Corrugated Metal Pipe (CMP) – ASTM A 798

Non-Reinforced Concrete Pipe (NRCP) – ASTM C-14

All installations must be per ASTM standard or the manufacturers specifications, which ever is more stringent. At a minimum, all pipe installations must have soil tight gasketed joints.

The following documents are additional references available from the Civil Engineering Division website:

- City of Knoxville Standard Detail COK-5 (Storm Pipe Bedding and Backfill)
- City of Knoxville Technical Specifications TS-05 (Mineral Aggregate Base)
- City of Knoxville Technical Specifications TS-20 (Storm Sewers and Pipe Culverts)

Policy 17

SURVEY CONTROL SYSTEM REQUIREMENTS

The purpose of this policy is to clarify plat requirements relative to section **44-92.2** of the *Knoxville-Knox County Minimum Subdivision Regulations* and for the use of the City of Knoxville's Survey Control System. The City of Knoxville's Survey Control System is currently based on the **NAD83 (2011/PA11/MA11) Epoch 2010.00.** To assist surveyors in tying surveys in the City of Knoxville to the System, the Department of Engineering has established a network of survey control monuments (points) within the city. New points continue to be established and published as needed and as resources permit. Information published for each point includes the date established, datum, northing and easting coordinates, latitude and longitude, elevations, scale factor, convergence angle, azimuth point numbers, description, and location information, etc. This information is published by the Engineering Department and is available at www.knoxvilletn.gov/government/city_departments_offices/engineering/civil_engineering_division/survey_control_points/.

Section **0820-03-.07(1)(c)** in the *Standards of Practice*, contained in *the Rules of Tennessee State Board of Examiners for Land Surveyors*, addresses north arrow requirements for general property surveys. It states the following:

> "The North arrow shall be shown, and shall be correlated with, the courses or bearings, with the source of reference clearly indicated."

These rules can be obtained at http://share.tn.gov/sos/rules/0820/0820.htm.

Section **44-92.2** of the *Knoxville-Knox County Minimum Subdivision Regulations* defines those surveys that must be tied and rotated to the City of Knoxville survey control system. It also defines the information that must be shown on the plat. It states the following:

> "All subdivisions within the City of five (5) or more lots and all resubdivisions within the City which combine or alter five (5) or more lots that have a property line or iron pin located within 2,000 feet of an approved control point in the City Survey Control System shall be tied to the system. All other subdivisions within the City that have a property line or iron pin located within 200 feet of an approved control point in the City Survey Control System shall be tied to the system.
>
> Coordinates of the approved control point shall be shown on the plat and all bearings shown on the plat shall be oriented to the survey control system. The tie line shall show the bearing and distance between the approved control point and the subdivision."

The information required by the Standards of Practice and the Minimum Subdivision Regulations must be included on all survey plats. In addition, when a survey is tied to the City of Knoxville's survey control system, the following information will also be required:

1. The survey shall be tied to an approved survey control point and rotated to the ***grid bearing*** between that point and a nearby second approved survey control point. This *grid bearing* shall be the bearing computed between the published coordinates of these two points. These points become the ***base control points*** for the survey.
2. A ***tie line*** from a property corner to the closest *base control point* shall be shown. The *tie line* shall include the ***grid bearing*** and measured ***ground distance*** of the line. ***Ground distance*** is defined as

the horizontal distance between two points as measured at ground datum. When grid distances are shown on the survey plat the corresponding **ground distance** shall also be shown and each adequately identified or noted.

3. **Beginning January 1, 2010**, plats required to be tied to the City's survey control system shall include a reference to the ***horizontal datum*** that the published coordinates are based on. The published coordinates are based on the **NAD83 (2011/PA11/MA11) Epoch 2010.00** datum, which may also be noted as **NAD83 (2011)** for the North American Continent. On **June 6, 2014**, the City performed an adjustment of these published coordinates. There shall be a 90 day grace period beginning on June 6, 2014 in which the published data prior to this adjustment may still be used on submitted plats. However, all plats subject to Policy 17, and submitted after **September 4, 2014**, shall be referenced to the current system, unless otherwise approved by the Engineering Director

4. The ***point identification number*** and the latest published ***north*** and ***east coordinate*** of the *base control point* at the end of the *tie line* shall be labeled on the plat verbatim as published, including ***all*** digits after the decimal point. The ***horizontal datum*** in Item 3 above shall be noted on the plat.

5. The ***grid north meridian*** shall be identified properly. When labeling the north arrow, ***"GRID NORTH (*NAD83 (2011))",*** is preferred to labels such as "NAD-83", "SPCS", "Tennessee Lambert Grid", etc. Do not label the North arrow as "KGIS" or any variation thereof. A statement shall be on the plat indicating the horizontal datum reference, for example **NAD83 (2011/PA11/MA11) Epoch 2010.00** or **NAD83 (2011),** which is the accepted abbreviation in North America..

6. To explain the basis for the *grid north meridian*, the following note shall be shown on the plat. This note also clarifies that distances are horizontal at ground datum and have not been converted to *grid distances* by applying a datum adjustment factor.

   "GRID NORTH is based on a bearing of *__X __ Deg° Min' Sec" _ Y__* from City Control Point # _____ to # _____ . Distances have not been reduced to grid."

   At the surveyor's discretion, a note may be added to the grid north statement to explain the difference in coordinates due to the adjustment by the City effective June 6, 2014.

   If added the note should read as follows:

   "Survey control data is based on a City of Knoxville adjustment effective June 6, 2014"

7. If a published elevation for an approved control point is labeled on the plat, the proper ***vertical reference datum*** must also be labeled, for example"NGVD29" or "NAVD88". Both elevations are included in the published data. Elevations shall be labeled verbatim as published, including all digits after the decimal point.

When selecting the ***base control points*** for a survey, the integrity of those points should be confirmed at the beginning of the survey by carefully inspecting the points and measuring and comparing the *ground distance* between them to the *grid distance* computed from the published coordinates. When utilizing the city control system, *ground distances* should be longer than *grid distances* by a factor of approximately 1.0001 (about 0.10 feet longer per 1,000 feet). **Please report any missing, disturbed, or otherwise unusable control points to the City Surveyor by calling (865) 215-6100.**

Survey control data for the City of Knoxville Survey Control System is published and maintained by the Department of Engineering. This data is available at

www.knoxvilletn.gov/government/city_departments_offices/engineering/civil_engineering_division/survey_control_points.

It is also available through the Technical Services office (phone 865-215-2103) located in Room 462 of the City County Building at 400 Main Street, Knoxville, Tennessee 37901.

Policy 18

UNDERGROUND STORMWATER FACILITY MAINTENANCE

This policy is for the purpose of generally specifying the types of maintenance for underground stormwater facilities. The most common types of underground stormwater facilities are oil/water separators, sand filtration units, water quality inlets, and modified catch basins. Many types of underground stormwater facilities are proprietary in nature, for which the unit manufacturer will have a recommended maintenance procedure and schedule. In general, underground stormwater detention is not allowed (per ST-08 of the *Knoxville BMP Manual*).

Underground stormwater facilities are typically constructed for new development or redevelopment projects with a potential for causing stormwater pollution, for which the developer is must obtain a Special Pollution Abatement Permit (see Chapter 7 of Knoxville BMP Manual) during the site development process. Or alternatively, the developer may be exempt from stormwater detention but is required to provide "first flush" treatment or similar stormwater quality treatment. Types of projects requiring a Special Pollution Abatement Permit are listed in Section 22.5-37 of the Knoxville Stormwater and Street Ordinance (see Appendix B).

A Special Pollution Abatement Permit typically requires a maintenance schedule, preventive maintenance program, spill protection program and other emergency measures, and any additional information needed for operation and maintenance of the underground stormwater facility. Owners of underground stormwater facilities must follow all requirements of the applicable document "Covenants for Permanent Maintenance of Stormwater Facilities" (CPMSF), to be recorded at the Knox County Register of Deeds during the plat review process.

MINIMUM MAINTENANCE REQUIREMENTS

The property owner will maintain the approved stormwater and/or water quality facilities in good working order acceptable to the City Engineering Department. Minimum maintenance of the stormwater facilities shall include the routine removal of sediment, debris, oil, hydrocarbons, and foreign materials so that the operation and capacity of the stormwater quality facility continues to function properly. The stormwater quality facility must have an ongoing inspection, maintenance, and reporting schedule. Routine inspection and maintenance must be performed on a schedule recommended by the manufacturer, required by the City Engineering Department, agreed to as part of the Site Development Permit, or as actually needed, whichever is most restrictive.

INSPECTION OF THE STORMWATER QUALITY FACILITY

Large vault-type treatment systems are typically designed to have a much greater storage capacity than the smaller catch basin inserts or filter units. Therefore the large systems may require less frequent inspections since they may be less susceptible to clogging, overflows, and flow bypasses.

In the first year of operation of a large vault system, the City of Knoxville recommends inspections at least once each quarter during spring, summer and early fall. Monthly inspections should be conducted from November through March to determine how leaf litter will impact the flow capacity of the structure.

Thereafter, the inspection schedule can be modified according to experience or to meet specific stormwater permit requirements. The City of Knoxville requires a minimum of quarterly visual inspections for large systems and more frequent inspections for smaller systems, filtration devices, and/or absorbent systems.

During routine inspections, sediment accumulation is measured with a stadia rod, trash and floating solids can be visually inspected and dipped out, and floating oil and hydrocarbons are measured with a Teflon bailer. Filters and absorbent systems may vary but most should allow some type of visual inspection. Some popular hydrocarbon absorbents will turn from white when new to black as they reach full capacity. All systems must be cleaned when any of the indicator pollutant level criteria are met or when the regular inspection schedule interval expires.

CLEANING THE STORMWATER QUALITY FACILITIES

The stormwater quality facility should be cleaned shortly after the project is complete and erosion control and vegetation has been placed. Generally, a sump-vacuum truck is the best and most convenient method of removing the captured sediment and floatables from the larger stormwater quality facilities and catch basin sumps. Floatables and oil should be removed in a separate procedure prior to the removal of the sediment. After the floatables and oil have been removed, the vacuum hose may be lowered down to remove the accumulated sediments from the bottom of the collection chamber. For systems with large storage volume, this maintenance must be done at least annually, although more frequent maintenance may be required to keep the system operating properly in areas with substantial pollution or sediment.

Filter and adsorbent systems may be maintained by manually removing the accumulated trash and sediments from the unit and replacing the filter/absorbent media. Some of this maintenance must be done at least quarterly. Filter/absorbent life will depend on the type and amount of media and the pollutant load from the contributing drainage area. Heavy use areas, such as fuel islands, may need daily maintenance to remove cigarette butts, cups, and other litter from the small storage area. The filters may require frequent replacement in high spill/drip areas. Large sand filters may only need to have the top layer of media scraped to restore capacity rather than replace the entire volume.

All manhole covers and grates shall be securely replaced following cleaning activities. All trash, sediment, oil and contaminated water must be properly disposed at an approved waste facility.

RECORDKEEPING AND REPORTING

Policy 19 in the Land Development Manual (Appendix C) further describes the requirements for recordkeeping and reporting of underground stormwater facilities. Inspections must be conducted at least quarterly, with all pertinent information recorded into an inspection log that must kept on the site. Annually, the property owner must certify in writing that the stormwater quality facility has been inspected and the system is functioning properly. The property owner must submit the certification by January 15 of the following year. Certification will generally include a list of inspections, repairs, and maintenance conducted with any receipts and signatures.

Policy 19

UNDERGROUND STORMWATER FACILITY RECORDKEEPING AND REPORTING

This policy is authorized by the Knoxville Stormwater Ordinance (§22.5-54) and is essential to ensure that stormwater quality is not allowed to degrade over time. Therefore, the City of Knoxville requires that underground stormwater facilities must be periodically inspected and maintained in an organized fashion at least once every three months. Minimum requirements are:

- Inspection logs and records will be kept at the property site, in an organized fashion, and must be made quickly available when asked by a representative of the City Engineering Department or by a representative of TDEC.
- Inspection logs will include the name and title of the inspector, the date of inspection, quantity and types of pollution or sediment observed, recommendations for maintenance and cleaning, and overall soundness of the underground stormwater facility.
- The property owner must certify, in writing, on an annual basis that the stormwater facility has been periodically inspected and is currently functioning properly. The certification will generally cover the calendar year (January to December) and must be submitted by the 15th of January immediately following the inspection calendar year.
- The property owner must also report annually: all maintenance and cleaning activities, dates of inspection and maintenance, list of repairs or replacement parts, name of person and company that performs maintenance, and any other relevant information, details or photographs.

Submit annual certifications for underground stormwater facilities to:

City of Knoxville Engineering Department
Stormwater Quality Section
P.O. Box 1631
Knoxville, TN 37901

New underground stormwater facilities should be designed and constructed in accordance with the Knoxville BMP Manual and the manufacturer's recommendations (when applicable). Follow the instructions in Chapters 6 and 7 as needed if preparing a Stormwater Pollution Prevention Plan (SWPPP) or a Stormwater Pollution Abatement Permit (SPAP). Common types of underground stormwater facilities requiring inspection and recordkeeping may include (with a reference to the Knoxville BMP Manual in parentheses):

- Infiltration systems (ST-03) Such as an infiltration trench or drywell.
- Media filtration inlet (ST-06)
- Water quality inlet (ST-06)
- Oil/water separator (ST-07)
- Underground detention facility (ST-08) Not allowed by Stormwater Engineering Div.
- Any other structures which have difficult access or any nonstandard means of entry.

Policy 20

NO-RISE CERTIFICATION FOR FLOODWAY ENCROACHMENT

The purpose of this policy is to clarify the requirements for no-rise certifications within the City of Knoxville. The basis for a no-rise certification is the attached document from FEMA Region IV, except that the City of Knoxville has defined the 500-year flood event as the base flood by city ordinance (Chapter 12, Flood Damage Prevention and Control, Section 12-4, Definitions). See Appendix B of the Land Development Manual for a copy of this ordinance, or refer to the online municipal code by using the pulldown menu on most city webpages to select "Ordinances & Charter" underneath the heading "City Government".

National Flood Insurance Program:

The City of Knoxville (community number 475434) participates in the National Flood Insurance Program maintained by the Federal Emergency Management Agency (FEMA). There are approximately 400 NFIP communities in Tennessee alone, including Farragut (470387) and Knox County (475433). Benefits to the City of Knoxville include: standardized flood insurance rates, federal funds for flood control projects and studies, eligibility for disaster recovery loans and grants, etc. Currently, Knoxville is rated as a Class 9 community by FEMA. Knoxville currently receives a 5% discount on flood insurance property rates for homeowners, businesses, government property, institutions, schools, etc.

Instructions for the No-Rise Certification:

Section 12-4 of the city ordinance defines the base flood as the 500-year flood for the purposes of flood protection. Section 12-52 of the city ordinance prohibits any encroachment within the floodway unless a no-rise certification demonstrates that there is no increase in flood levels during the occurrence of the 500-year flood. Therefore, all analyses on the following pages should be performed for the 500-year flood instead of the 100-year flood. See Policy 23 for the list of studied streams and the maximum extent of floodway profiles. Also be aware that there is a very different type of no-rise certification for encroachment upon the **No-Fill Line**, which is described in Policy 21.

The following document (R4-MT) contain instructions issued by FEMA Region IV (southeastern USA) for preparing a no-rise certification:

Procedures for "No-Rise" Certification for Proposed Developments in Regulatory Floodways	(3 pg)
Example of an Engineering "No-Rise" Certification	(1 pg)

(Step 1) -- The City of Knoxville Engineering Department (215-2148) or the Tennessee Valley Authority (632-6851) can furnish the current HEC-2 or HEC-RAS 500-year floodway model for a specified stream or creek, free of charge, other than mailing if needed. The City of Knoxville Engineering Department can furnish photocopied portions of the Flood Insurance Study (profile, floodway tables) and Flood Insurance Rate Map (1"=1000' scale) to customers who request these items in person. Or portions of the FIS and FIRMs can be obtained from the FEMA Map Service Center.

The no-rise certification must have the supporting data as described in form R4-MT, including:

- plots of each cross section
- list of modifications to the original HEC-2 or HEC-RAS file
- a plan drawing containing cross section locations and both existing & proposed topography
- electronic input and output files on diskette or CD (effective, existing and proposed models)

Federal Emergency Management Agency

Region IV
3003 Chamblee-Tucker Road
Atlanta, Georgia 30341

Original - January/92

Modified version of R4-MT *(except 500-year flood is specified instead of FEMA 100-year flood)*

PROCEDURES FOR "NO-RISE" CERTIFICATION FOR PROPOSED DEVELOPMENTS IN REGULATORY FLOODWAYS

Section 60.3 (d) (3) of the National Flood Insurance Program (NFIP) regulations states that a community shall *"prohibit encroachments, including fill, new construction, substantial improvements, and other developments within the adopted regulatory floodway unless it has been demonstrated through hydrologic and hydraulic analyses performed in accordance with standard engineering practice that the proposed encroachment would not result in any increase in flood levels within the community during the occurrence of the base (100-year) ** flood discharge."*

Prior to issuing any building grading or development permits involving activities in a regulatory floodway, the community must obtain a certification stating the proposed development will not impact the pre-project base flood elevations, floodway elevations, or floodway data widths. The certification should be obtained from the permittee and signed and sealed by a professional engineer.

The engineering or "no-rise" certification must be supported by technical data. The supporting technical data should be based upon the standard step-backwater computer model utilized to develop the 500-year floodway shown on the community's effective Flood Insurance Rate Map (FIRM) or Flood Boundary and Floodway Map (FBFM) and the results tabulated in the community's Flood Insurance Study (FIS).

Although communities are required to review and approve the "no-rise" submittals, they may request technical assistance and review from the FEMA regional office. However, if this alternative is chosen, the community must review the technical submittal package and verify that all supporting data, listed in the following paragraphs, are included in the package before forwarding to FEMA.

To support a "no-rise" certification for proposed developments encroaching into the regulatory floodway, a community will require that the following procedures be followed:

Currently Effective Model

1. Furnish a written request for the step-backwater computer model for the specified stream and community, identifying the limits of the requested data. A fee will be assessed for providing the data. Send data requests to:

***	Federal Emergency Management Agency Region IV HIRA Branch 3003 Chamblee-Tucker Road Atlanta, GA 30341	or	FIS Information Specialist Dewberry & Davis 8401 Arlington Boulevard Fairfax, VA 22031-4666

---

* The minimum flood required for FEMA floodplain analysis is the 100-year flood, unless local regulations are stricter.
** The base flood in the City of Knoxville is defined as the 500-year flood by City Ordinance, Chapter 12, Section 12-4.
*** Step-backwater models may also be obtained from TVA or City of Knoxville Engineering Department without charge.

Duplicate Effective Model

2. Upon receipt of the step-backwater computer model, the engineer should run the original step-backwater model to duplicate the data in the effective FIS.

Existing Conditions Model

3. Revise the original step-backwater model to reflect site specific existing conditions by adding new cross-sections (two or more) in the vicinity of the proposed development, without the proposed development in place. Floodway limits should be manually set at the new cross-section locations by measuring from the effective FIRM or FBFM. The cumulative reach lengths of the stream should also remain unchanged. The results of these analyses will indicate the 500-year floodway elevations for revised existing conditions at the proposed project site.

Proposed Conditions Model

4. Modify the revised existing conditions model to reflect the proposed development at the new cross-sections, while retaining the currently adopted floodway widths. The over-bank roughness coefficients should remain the same unless a reasonable explanation of how the proposed development will impact Manning's "n" values should be included with the supporting data. The results of this floodway run will indicate the 500-year floodway elevations for proposed conditions at the project site. These results must indicate NO impact on the 500-year flood elevations, floodway elevations, or floodway widths shown in the Duplicate Effective Model or in the Existing Conditions Model.

The original FIS model, the duplicate effective FIS model, the revised existing conditions model, and the proposed conditions model should all produce the same exact results.

The "no-rise" supporting data and a copy of the engineering certification must be submitted to and reviewed by the appropriate community official prior to issuing a permit.

The "no-rise" supporting data should include, but may not be limited to:

a. Duplicate of the original FIS step-backwater model printout or floppy disk.

b. Revised existing conditions step-backwater model.

c. Proposed conditions step-backwater model.

d. FIRM and topographic map, showing floodplain and floodway, the additional cross-sections, the site location with the proposed topographic modification superimposed onto the maps, and a photocopy of the effective FIRM or FBFM showing the current regulatory floodway.

e. Documentation clearly stating analysis procedures. All modification made to the original FIS model to represent revised existing conditions, as well as those made to the revised existing conditions model to represent proposed conditions, should be well documented and submitted with all supporting data.

f. Copy of effective Floodway Data Table copied from the FIS report.

---

* The minimum flood required for FEMA floodplain analysis is the 100-year flood, unless local regulations are stricter.

** The base flood in the City of Knoxville is defined as the 500-year flood by City Ordinance, Chapter 12, Section 12-4.

*** Step-backwater models may be obtained from TVA or City of Knoxville Engineering Department without charge.

g. Statement defining source of additional cross-section topographic data and supporting information.

h. Cross-section plots, of the added cross sections, for revised existing and proposed conditions.

i. Certified planimetric (boundary survey) information indicating the location of structures on the property.

j. Copy of the microfiche, or other applicable source, from which input for original FIS HEC-2 model was taken.

k. Floppy disk with all input files.

l. Printout of output files from EDIT runs for all three floodway models.

The engineering "no-rise" certification and supporting technical data must stipulate NO IMPACT on the 500-year flood elevation, floodway elevations, or floodway widths at the new cross-sections and at all existing cross-sections anywhere in the model. Therefore, the revised computer model should be run for a sufficient distance (usually 1 mile, depending on hydraulic slope of the stream) upstream and downstream of the development site to ensure proper "no-rise" certification.

Attached is a sample "no-rise" certification form that can be completed by a registered professional engineer and supplied to the community along with the supporting technical data when applying for a development permit.

---

* The minimum flood required for FEMA floodplain analysis is the 100-year flood, unless local regulations are stricter.

** The base flood in the City of Knoxville is defined as the 500-year flood by City Ordinance, Chapter 12, Section 12-4.

*** Step-backwater models may be obtained from TVA or City of Knoxville Engineering Department without charge.

ENGINEERING "NO-RISE" CERTIFICATION FOR FLOODWAY ENCROACHMENT

This is to certify that I am a duly qualified engineer licensed to practice in the state of Tennessee.

It is to further certify that the attached technical data supports the fact that proposed

_____ will not impact
(Name of Development)

the Base Flood Elevations (500-year flood), floodway elevations and the floodway widths on

_____ at published sections in the Flood Insurance Study for
(Name of Stream)

_____, dated _____
(Name of Community & Community ID Number)

and will not impact the Base Flood Elevations (500-year flood), floodway elevations, and floodway widths at unpublished cross-sections in the vicinity of the proposed development.

Signature _____

Phone Number _____ Email_____

Representing _____

Address_____

City_____

State _____ Zip Code _____

_____
(Date)

Certifying seal or stamp

Based upon
R4-MT Form
Revised 6/03

FOR CITY OF KNOXVILLE ENGINEERING DEPARTMENT USE ONLY:		
No-Rise Certification is: ☐ Approved ☐ Disapproved		
Official's Name	Official's Signature	Title

* The minimum flood required for FEMA floodplain analysis is the 100-year flood, unless local regulations are stricter.
** The base flood in the City of Knoxville is defined as the 500-year flood by City Ordinance, Chapter 12, Section 12-4.

Policy 21

NO-FILL LINE

The purpose of this policy is to clarify the requirements for the **No-Fill Line** within the City of Knoxville. The no-fill line, which is defined in Section 22.5-23(f)(1) of the Stormwater and Street Ordinance (Chapter 22.5 of the Knoxville City Code), must be clearly shown and labeled on the site development plans and also on the recorded survey plat.

A **No-Fill Line** is defined for studied streams where a floodway profile has been computed; it is a continuous line halfway between the 100-year floodway and the 100-year floodplain boundaries. Any type of fill which alters the conveyance or the flood storage capacity of the regulated floodplain is prohibited within the no-fill line. This includes buildings, structures, construction fill, soil, riprap, pavement, concrete, signs, other materials, etc. that reduce the stream cross-section anywhere within the no-fill line. See Policy 23 for the list of studied streams and maximum extent of floodway profiles.

The requirement for a **No-Fill Line** may be waived if a drainage study shows a rise of less than 0.1 feet on all existing properties within 0.5 miles (upstream and downstream) of the proposed site development using a method widely accepted among engineering professionals. The drainage study (also called a **no-rise certification**) must be prepared, signed and stamped by a registered professional engineer licensed to practice in the State of Tennessee. The procedure for proving a no-rise certification for encroachment of the no-fill line is part of this policy. This no-rise certification uses the 100-year flood model (without floodway) to demonstrate no impacts on the 100-year water surface elevation.

This type of no-rise certification is very different than the one described in Policy 20 (No-Rise Certification For Floodway Encroachment). The **regulatory floodway** is established by the Federal Emergency Management Agency (FEMA) by the mechanism of an official Flood Insurance Study (FIS), Flood Boundary and Floodway Maps (FBFMs), and Flood Insurance Rate Maps (FIRMs). The regulatory floodway is thus defined by federal regulations to be absolutely necessary for conveying the fast-moving central portion of the flood event. The basis for a no-rise certification for floodway encroachment is the 500-year flood event per City Code.

Instructions for the No-Rise Certification of Encroachment of the No-Fill Line:

Procedures for "No-Rise" Certification for Proposed Developments	(3 pg)	Adapted from R4-MT
Example of an Engineering "No-Rise" Certification	(1 pg)	Adapted from R4-MT

(Step 1) -- The City of Knoxville Engineering Department (215-2148) or the Tennessee Valley Authority (632-6851) can furnish the current HEC-2 or HEC-RAS 100-year flood model for a specified stream or creek, free of charge, other than mailing charges if needed. The City of Knoxville Engineering Department can furnish photocopied pages of the Flood Insurance Study (profile, floodway tables) and Flood Insurance Rate Maps (1"=1000' scale) to customers who request these items in person. Or portions of the FIS and FIRMs can be obtained from the FEMA Map Service Center.

The no-rise certification must have the supporting data as described in form R4-MT, including:

- plots of each cross section
- list of modifications to the original HEC-2 or HEC-RAS file
- a plan drawing containing cross section locations and both existing & proposed topography
- electronic input and output files on diskette or CD (effective, existing and proposed models)

Federal Emergency Management Agency

Region IV
3003 Chamblee-Tucker Road
Atlanta, Georgia 30341

Modified version of R4-MT (City of Knoxville) Original - January/92

PROCEDURES FOR "NO-RISE" CERTIFICATION FOR PROPOSED DEVELOPMENTS WITHIN THE NO-FILL LINE

Section 60.3 (d) (3) of the National Flood Insurance Program (NFIP) regulations states that a community shall *"prohibit encroachments, including fill, new construction, substantial improvements, and other developments within the adopted regulatory floodway unless it has been demonstrated through hydrologic and hydraulic analyses performed in accordance with standard engineering practice that the proposed encroachment would not result in any increase in flood levels within the community during the occurrence of the base (100-year) flood discharge."*

Prior to issuing any building grading or development permits involving activities within the regulatory no-fill line, the community must obtain a certification stating the proposed development will not impact the pre-project base flood elevations, floodplain elevations, or floodplain data widths. The certification should be obtained from the permittee and signed and sealed by a professional engineer.

The engineering or "no-rise" certification must be supported by technical data. The supporting technical data should be based upon the standard step-backwater computer model utilized to develop the 100-year floodplain shown on the community's effective Flood Insurance Rate Map (FIRM) or Flood Boundary and Floodway Map (FBFM) and the results tabulated in the community's Flood Insurance Study (FIS).

Although communities are required to review and approve the "no-rise" submittals, they may request technical assistance and review from the FEMA regional office. However, if this alternative is chosen, the community must review the technical submittal package and verify that all supporting data, listed in the following paragraphs, are included in the package before forwarding to FEMA.

To support a "no-rise" certification for proposed developments encroaching into the regulatory no-fill line, the City of Knoxville Engineering Department will require that the following procedures be followed:

Currently Effective Model

1. Furnish a written request for the step-backwater computer model for the specified stream and community, identifying the limits of the requested data. A fee will be assessed for providing the data. Send data requests to:

***	Federal Emergency Management Agency Region IV HIRA Branch 3003 Chamblee-Tucker Road Atlanta, GA 30341	or	FIS Information Specialist Dewberry & Davis 8401 Arlington Boulevard Fairfax, VA 22031-4666

---

* The minimum flood required for FEMA floodplain analysis is the 100-year flood, unless local regulations are stricter.

** The base flood for the No-Fill Line only, in the City of Knoxville, is defined as the 100-year flood, without floodway.

*** Step-backwater models may also be obtained from TVA or City of Knoxville Engineering Department without charge.

Duplicate Effective Model

2. Upon receipt of the step-backwater computer model, the engineer should run the original step-backwater model to duplicate the data in the effective FIS.

Existing Conditions Model

3. Revise the original step-backwater model to reflect site specific existing conditions by adding new cross-sections (two or more) in the vicinity of the proposed development, without the proposed development in place. Floodplain limits should be manually set at the new cross-section locations by measuring from the effective FIRM or FBFM. The cumulative reach lengths of the stream should also remain unchanged. The results of these analyses will indicate the 100-year floodplain elevations for revised existing conditions at the proposed project site.

Proposed Conditions Model

4. Modify the revised existing conditions model to reflect the proposed development at the new cross-sections, while retaining the currently adopted floodplain widths. The over-bank roughness coefficients should remain the same unless a reasonable explanation of how the proposed development will impact Manning's "n" values should be included with the supporting data. The results of this floodplain model run will indicate the 100-year floodplain elevations and widths for proposed conditions at the project site. These results must indicate a rise of less than 0.1 feet for the 100-year flood elevations, floodplain elevations, or floodplain widths shown in the Duplicate Effective Model or in the Existing Conditions Model.

The original FIS model, the duplicate effective FIS model, the revised existing conditions model, and the proposed conditions model should all produce the same exact results.

The "no-rise" supporting data and a copy of the engineering certification must be submitted to and reviewed by the appropriate community official prior to issuing a permit.

The "no-rise" supporting data should include, but may not be limited to:

a. Duplicate of the original FIS step-backwater model printout or floppy disk.

b. Revised existing conditions step-backwater model.

c. Proposed conditions step-backwater model.

d. FIRM and topographic map, showing floodplain and floodway, the additional cross-sections, the site location with the proposed topographic modification superimposed onto the maps, and a photocopy of the effective FIRM or FBFM showing the current regulatory floodway.

e. Documentation clearly stating analysis procedures. All modification made to the original FIS model to represent revised existing conditions, as well as those made to the revised existing conditions model to represent proposed conditions, should be well documented and submitted with all supporting data.

f. Copy of effective Floodway Data Table copied from the FIS report.

g. Statement defining source of additional cross-section topographic data and supporting information.

h. Cross-section plots, of the added cross sections, for revised existing and proposed conditions.

i. Certified planimetric (boundary survey) information indicating the location of structures on the property.

---

* The minimum flood required for FEMA floodplain analysis is the 100-year flood, unless local regulations are stricter.
** The base flood for the No-Fill Line only, in the City of Knoxville, is defined as the 100-year flood, without floodway.
*** Step-backwater models may be obtained from TVA or City of Knoxville Engineering Department without charge.

j. Copy of the microfiche, or other applicable source, from which input for original FIS HEC-2 model was taken.

k. Floppy disk with all input files.

l. Printout of output files from EDIT runs for all three step-backwater models.

The engineering "no-rise" certification and supporting technical data must stipulate a rise of less than 0.1 feet on the

100-year flood elevation, floodplain elevations, or floodplain widths at the new cross-sections and at all existing cross-sections anywhere in the model. Therefore, the revised computer model should be run for a sufficient distance (usually one-half (1/2) mile, depending on hydraulic slope of the stream) upstream and downstream of the development site to ensure proper "no-rise" certification.

Attached is a sample "no-rise" certification form that can be completed by a registered professional engineer and supplied to the community along with the supporting technical data when applying for a development permit.

---

* The minimum flood required for FEMA floodplain analysis is the 100-year flood, unless local regulations are stricter.
** The base flood for the No-Fill Line only, in the City of Knoxville, is defined as the 100-year flood, without floodway.
*** Step-backwater models may be obtained from TVA or City of Knoxville Engineering Department without charge.

ENGINEERING "NO-RISE" CERTIFICATION FOR ENCROACHMENT UPON THE NO-FILL LINE

This is to certify that I am a duly qualified engineer licensed to practice in the state of Tennessee. It is to further certify that the attached technical data supports the fact that proposed _____ will not impact
(Name of Development)

the Base Flood Elevations (100-year flood), floodplain elevations and the floodplain widths on _____ at published sections in the Flood Insurance Study for
(Name of Stream)

_____, dated _____
(Name of Community & Community ID Number)

and will not impact the Base Flood Elevations (100-year flood), floodplain elevations, and floodplain widths at unpublished cross-sections in the vicinity of the proposed development.

Signature _____

Phone Number _____ EMAIL _____

Representing _____

Address_____

City_____ State _____ Zip Code _____

_____
(Date)

Certifying seal or stamp

Based upon
R4-MT Form
Revised 6/03

---

* The minimum flood required for FEMA floodplain analysis is the 100-year flood, unless local regulations are stricter.
** The base flood for the No-Fill Line only, in the City of Knoxville, is defined as the 100-year flood, without floodway.

Policy 23

LIST OF STUDIED STREAMS

A list of studied streams is desirable for the purpose of easily identifying creeks, streams and rivers with computed floodway and floodplain information. This information is necessary to determine minimum floor elevations, no-fill lines (Policy 21), stream buffer zones (Policy 22), and other information for site development projects in the vicinity of a studied stream. Minimum floor elevations for new buildings and structures are required to be at least 1 foot above the computed 500-year water surface elevation according to Section 12-52(5) of the Knoxville Flood Damage Prevention and Control Ordinance (see Appendix B).

Table 23-1

This table shows every studied creek and stream for which any portion falls within the Knoxville city limits. The maximum extent of the studied flood profile is listed without regard to the city limits. Stream mile 0.00 indicates the mouth of the creek or stream, so that the miles then measure the upstream distance. A physical description of the upstream limit is given in Table 23-1. In addition, each creak or stream which mostly falls outside the city limits is denoted by **.

The sources of information for each stream are "checked" in the appropriate boxes. The most recent information shall generally be used to determine floodplain and floodway widths, computed water surface elevations, and other hydraulic parameters. In some cases, the most recent information is TVA unpublished studies, which can be viewed during normal business hours at the Engineering Department offices located on the 4th Floor of the City County Building. Call the Engineering Department at 215-2148 for assistance in determining whether individual properties are in a floodplain, flood zone, etc.

These information sources can be viewed at the Engineering Department offices (located on the 4th Floor of the City County Building). FEMA Flood Insurance Studies and maps can be viewed and purchased inexpensively online at the FEMA Map Service Center website.

#1 - The Flood Insurance Study for Knox County (FEMA Community 475433), published November 1982, and the associated Flood Insurance Rate Maps (FIRMs), last updated in May 1983.

#2 - The Flood Insurance Study for the City of Knoxville (FEMA Community 475434), last updated January 1991, and the associated Flood Insurance Rate Maps (FIRMs), last updated in January 1991.

#3 - Knox County reports for Beaver Creek Watershed (February 2000) and for Ten Mile Creek Watershed (February 2000), prepared by Ogden Environment and Energy Services (now called AMEC).

#4 - TVA flood restudy and remapping efforts (not yet published, draft version January 2003), prepared by TVA for the purpose of revising the official Flood Insurance Study for the City of Knoxville and Knox County. FEMA is analyzing TVA results in a formal review.

The Engineering Department has HEC-2 and HEC-RAS computer models that provide the specific flood profiles, cross sections, and modeling assumptions for each of these reports. The City of Knoxville Engineering Department reserves the right to refer to the underlying computer model to specifically interpret the published flood profiles and maps.

Table 23-1

STREAM NAME	**Maximum Extent for Studied Flood Profile of the particular stream** (whether within City of Knoxville limits or outside) (Stream miles)	**Physical Description of the Upper Limit for Studied Flood Profile** (whether within City of Knoxville limits or outside) (----------)	#1 (1983) Flood Study (FIS)	#2 (1991) Knoxville (FIS)	#3 (2001) Flood Study City (FIS)	#4 (2003) Knoxville Reports for Beaver & Ten Mile	TVA (for eventual inclusion into official FIS)
Beaver Creek **	0.00 to 44.33	Border with Union County	✓			✓	
First Creek	0.00 to 7.13	Knox Road bridge			✓		✓
First Creek – Trib #1	0.00 to 0.76	Montrose Road bridge					✓
First Creek – Trib #2	0.00 to 0.46	Bend along Parkway Drive					✓
Fourth Creek	0.00 to 3.84	Above Middlebrook Pike	✓		✓		✓
Fourth Creek – Trib #1	0.00 to 2.14	2nd x-ing with Lawford Road			✓		✓
Fourth Creek – Trib #2	0.00 to 1.17	Wellington Drive			✓		
Fourth Creek – Trib #3	0.00 to 0.81	Kinzalow Dr (near Stockton)			✓		✓
French Broad River **	0.00 to 19.20	Border with Sevier County	✓				✓
Goose Creek	0.00 to 1.20	Candora Road			✓		
Goose Creek – Trib #1	0.00 to 0.24	Bikepath bridge			✓		
Grassy Creek **	0.00 to 2.17	Municipal Golf Course	✓			✓	
Hines Branch **	0.00 to 2.22	Mynatt Road				✓	
Holston River **	0.00 to 23.10	Border with Grainger County	✓		✓		
Knob Fork **	0.00 to 4.20	Dry Gap Pike	✓			✓	
Love Creek	0.00 to 4.32	Mill Road & Southern RR	✓		✓		
Love Creek – Tributary	0.00 to 0.88	Carta Road					✓
Murphy Creek **	0.00 to 1.13	Murphy Road	✓				
Second Creek	0.00 to 5.83	Charlene Lane near I-75			✓		
Sinking Creek **	0.00 to 1.88	Middlebrook Pike	✓			✓	
Stock Creek **	2.47 to 6.17	McCammon Road	✓				✓
Swanpond Creek **	0.00 to 6.06	Huckleberry Springs Road	✓				
Ten Mile Creek **	0.00 to 5.64	East of Robinson Road	✓		✓	✓	
Ten Mile Creek – Trib #1	0.00 to 1.07	Corteland Drive	✓		✓	✓	
Ten Mile Creek – Trib #2	0.00 to 0.44	Echo Valley Road	✓			✓	
Tennessee River **	610.4 to 652.0	Splits into two rivers at 652.0	✓				✓
Third Creek	0.00 to 7.97	Vienna Dr and Mondale Rd			✓		
Third Creek – East Fork	0.00 to 1.77	Tennessee Avenue			✓		
Turkey Creek **	0.00 to 6.20	Simmons Road	✓				✓
Turkey Creek – Trib #1	0.00 to 0.30	Gilbert Drive	✓				✓
Whites Creek **	0.00 to 3.24	McCampbell Road	✓		✓		✓
Williams Creek	0.00 to 2.04	Wilson Avenue					✓

The Water Quality Forum website (http:/www.waterqualityforum.org/) has a very useful tool – an interactive mapping page to determine the locations and watershed boundaries for various Knox County creeks and streams. The information available at this website will increase gradually, with the intended

** -- Most of this studied stream is outside of the Knoxville city limits.

goal of providing floodplains, water surface profiles and other highly technical information in a user-friendly format.

Table 23-2

This table lists the various tributaries and their approximate locations. Since tributaries are not usually labeled on street maps or county maps, this table helps to identify studied streams for which a floodway profile has been computed. Tributaries were originally numbered for the Flood Insurance Studies, but are not numbered on the USGS 7.5-minute quadrangle maps.

Table 23-2

Tributary Name	Maximum Extent for Studied Profile (Stream miles)	Street Crossings (from downstream to upstream)
First Creek – Trib #1	0.00 to 0.76	Rockcrest Road, Montrose Road (between Maple & Fair Dr)
First Creek – Trib #2	0.00 to 0.46	Meadow Road (north of Fair Drive)
Fourth Creek – Trib #1	0.00 to 2.14	Westland Drive, Lawford Road (twice)
Fourth Creek – Trib #2	0.00 to 1.17	Westfield Road, Kinston Pike, Wellington Drive
Fourth Creek – Trib #3	0.00 to 0.81	Wesley Road, Picadilly Road, driveways along Kinzalow Dr
Goose Creek – Tributary	0.00 to 0.24	Maryville Pike, footbridge, bikepath bridge, Chappell Road
Love Creek – Tributary	0.00 to 0.88	Tulane Road, S. Chilhowee Drive, Chilhowee Court
Ten Mile Creek – Trib #1	0.00 to 1.07	Walker Springs Road, Corteland Drive
Ten Mile Creek – Trib #2	0.00 to 0.44	Ebenezer Road, Echo Valley Road
Turkey Creek – Trib #1	0.00 to 0.30	Outlet Drive, Gilbert Drive

Assistance

Please call the Engineering Department at 215-2148 for assistance in determining whether individual properties are in a floodplain or flood zone, computing minimum finished floor elevations, whether flood insurance is required, etc. The Engineering Department can answer floodplain questions; however, questions of a technical nature need to be researched. Immediate answers are not always available if Engineering Department personnel have to check maps, plans, profiles, or cross sections to fully answer a question.

The Engineering Director serves as the floodplain administrator according to Section 12-31 of the Flood Damage Prevention and Control Ordinance, with substantial responsibility to protect the public welfare and satisfy FEMA requirements. The Engineering Director's responsibilities are listed in Section 12-32.

Common FEMA telephone numbers	FEMA Map Service Center	1-800-358-9616
	Flood insurance questions	1-888-FLOOD29
	FEMA map technical specialists	1-877-FEMA-MAP

Policy 24

APPEALED CONCEPT OR USE-ON-REVIEW PLAN

In order to address issues arising when concept or use-on-review plans approved by the Metropolitan Planning Commission are appealed to the City Council and the appeal is upheld by City Council, the engineering department will not issue site development permits until the final plat is approved and the appeal period has expired, or if appealed, until the appeals process (including any litigation) has been resolved.

Furthermore, as contemplated by the Metropolitan Planning Commission's minimum subdivision regulations, as adopted by the City, no resubmittal of the appealed concept or use-on-review plan to the Metropolitan Planning Commission will be required prior to design plan submittal. The applicant will move forward to the design plan review process correcting the deficiencies in the concept plan or use-on-review plan as designated by City Council. After the design plan has been approved by the appropriate reviewing agencies and upon application for final plat approval, the Metropolitan Planning Commission will consider the concept / use-on-review plan and final plat simultaneously, thus, fulfilling the Metropolitan Planning Commission's minimum subdivision regulations' final plat requirements of an approved concept / use-on-review plan and an approved design plan.

Policy 25

POST-CONSTRUCTION WATER QUALITY CONTROL FOR PROPRIETARY FLOW-THROUGH BEST MANAGEMENT PRACTICES (BMP's)

1. First Flush Pollutant Reduction Goals

New development and redevelopment are both required to remove 80% of the suspended solids from the post-construction runoff from the entire site, resulting from Knoxville's ninety-fifth percentile storm (1.5 inches of rainfall in a 24-hour period). In some rare cases, redevelopment sites will not be able to achieve the goal of 80% removal due to public MS4 or existing site constraints. In these cases, the redevelopment must achieve a removal rate to the maximum extent practicable. All redevelopment must improve the onsite stormwater quality regardless of existing constraints.

2. Special Pollution Abatement Permit (SPAP) Pollutant Reduction Goals

Some land uses are known to produce pollutants that are detrimental to water quality that would not be corrected by the standard First Flush treatment. These sites will require a Special Pollution Abatement Permit and will need additional structural and management BMP's to address the pollutants of concern. See Section 22.5-37 in Appendix B of the Knoxville Land Development Manual for more information regarding SPAP's.

3. Design Guidance

Most proprietary devices are rated to remove a specified percentage of suspended solids based on a peak flow rate. To calculate the peak design flow rate, the City of Knoxville requires that all hydrologic and hydraulic computations must be in accordance with NRCS unit hydrograph procedures using AMC II curve numbers and Type II rainfall distribution. See ST-10 Detention Computations in Section 6 of the Knoxville Best Management Practices (BMP) manual for more information using this method. All proprietary devices must treat the runoff from the entire site, resulting from Knoxville's ninety-fifth percentile storm (1.5 inches of rainfall in a 24-hour period). The BMP must also pass/bypass the flow resulting from the 10-year 24-hour storm without resuspension or releasing the captured pollutants.

4. Testing Requirements

It is the responsibility of the manufacturer to develop and implement technically valid plans for testing. The following guidelines are provided as minimum considerations for an approvable testing program. The City of Knoxville reserves the right to reject any data submitted including rejection based on invalid or undocumented testing procedures. The City of Knoxville may provide review of test plans as staff time allows.

For the City of Knoxville to adequately evaluate the performance of a device, a sufficient number of tests must be submitted by the manufacturer. The City of Knoxville requires that a minimum of twelve laboratory tests must be submitted for Full- and Pre-Treatment devices.

Full-Treatment Requirements:
To be approved for full treatment, the proprietary device must demonstrate at least an 80% suspended solids removal efficiency using the particle distribution specified below.

Pre-treatment Requirements:
Pre-treatment devices must be used in a treatment train with other BMP's to acquire the required removal rates of the pollutants of concern. If the proprietary device is going to be used in series with a pond, swale, or other BMP's, it must be able to remove at least 50% suspended solids for pre-treatment approval. Treatment trains utilizing BMP's other than First Flush Ponds will be evaluated and approved on a case-by-case basis. Factors used in determining approval include, but are not limited to: suspended solid removal rate, other BMP's in the treatment train, order of BMP's in the treatment train and type of post-construction land use.

When using a treatment train, the total removal rate can be determined by the following formula:

$$R=A+B-[(AxB)/100]$$

Where:

R= Total removal rate.
A= Removal rate of the upstream (first) BMP.
B= Removal rate of the downstream (second) BMP.

TSS Particle Distribution:
The City of Knoxville will accept a minimum of OK-110 or F-110 as the sediment added to the water for laboratory tests. Other sediments, which have a particle distribution with a D_{50} less than 100 microns and a density of particles $<2.65 g/cm^3$, will be accepted as well.

Test Requirements:

a. All laboratory tests must be performed by an independent third party or have the testing results verified by an independent agency. Devices will not be allowed to be used in the City of Knoxville without third party testing or verification of the test results (e.g. NJCAT).

b. All removal efficiencies must be reported as SSC or TSS (EPA method).

c. At a minimum, complete a total of twelve test runs; including three tests each at a constant flow rate of 25, 50,75, and 100 percent of the maximum treatment flow rate. These tests should be conducted with initial sediment loading of 50% of the unit's capture capacity. Preloaded sediment size should not exceed 150 microns D_{50}.

d. Three tests for each treatment flow rate must be conducted for influent concentrations of 100, 200, and 300 mg/L suspended solids.

Submittal Requirements
Please include, at a minimum, but not limited to, the following:

1. BMP Summary Sheet (attached).
2. All relevant laboratory test results, including:
   a. Influent and effluent paired sample results.
   b. Total weight input and discharged.
   c. Amount and gradation of preloaded sediment loading.
   d. Beginning and final weight of preloaded sediment in unit.
3. Calculate and report the flow rate, influent and effluent concentration and individual removal efficiency for the twelve test runs.
4. A report containing the following:
   a. Statement of the intended use of the device. Intended uses may include pretreatment (for floatables, oil and grease, or sediment, for example), water quality treatment, hydraulic detention, velocity dissipation, an element of a comprehensive treatment train, etc.
   b. Description of how the facility works.
   c. Statement showing the maximum flow (in cfs) that the device can pass.
   d. Engineering drawing of the assembled device.
   e. Installation guidance.
   f. Maintenance: schedule and detailed guidance.
   g. Certified tests of load bearing capacity for traffic bearing devices.
   h. List of any site characteristics that limit the technologies use (e.g. steep slopes, high ground water, base flows, soils, facility depth limits, risk of hazardous material spills, etc...).
   i. List of factors that can cause the facility to not perform correctly (weather, volume of trash, etc…).

The following additional information is suggested, although not required:

- Published technical papers, if available, documenting performance of the device.
- Parts list including materials of construction and recommended manufacturers.
- A list of locations, if any, where the device is installed and operational (prefer closest three).

Any device found not to meet the certified performance criteria in the field may be removed from the approved list. Submittals containing unsubstantiated or unrealistic claims will be discarded without further review pending receipt of a resubmittal without such claims. An approved device may not be suitable for use in all applications. The City of Knoxville may reject the use of an otherwise approved device if a specific application is determined to be not suitable.

Data Evaluation

Each device submitted will be classified into one of the following categories:

- Full Treatment
- Pre-Treatment for use with another BMP
- Pre-Treatment for use at a specific site
- Not approved
- Not enough data or incorrect data submitted

A list of acceptable devices will be compiled as devices are approved. See list A—Approved Vendor List at www.cityofknoxville.org/ldmanual/LD-EP25-A.pdf All BMP updates must be submitted and may require reevaluation. If the criteria listed in this policy change, all BMP's may need to be reevaluated to ensure that they meet current regulations.

Approval period

The City of Knoxville can recall an approval for any of the following reasons:

- Restrictions placed by either the Tennessee Department of Environment and Conservation (TDEC) or Environmental Protection Agency (EPA), or
- Product modifications or system failures indicating questionable performance capability, or
- Changes in the City of Knoxville stormwater regulations or policies, or
- Substantiated information provided to or discovered by the City that may determine the system does not perform as claimed or may do unforeseen harm to the environment or MS4.

Proprietary BMP's that are assumed to be acceptable for use in the City of Knoxville prior to this regulations revision shall continue to be accepted until June 30, 2009. After this date, applications meeting the requirements of this policy must be approved for the proprietary BMP to continue to be acceptable for use in the City of Knoxville.

BMP Summary Sheet

Date Submitted:

BMP Info

Vendor name:
Street:
City, State, Zip:
Contact name/number:

BMP Tested:
Model(s):
Maximum capacity (cfs):
Treatment flow rate (cfs):
Application for which approval:
( ) Full
( ) Pretreatment
( ) Specific Site

Laboratory Info

Name:
Street:
City, State, Zip:
Contact name/number:
Dates testing occurred:

Test Summary

Sediment used:
D_{50}=
Method (TSS or SSC):

Removal Efficiency

% Treatment Flow Rate

Influent concentration	25	50	75	100
100 mg/l				
200 mg/l				
300 mg/l				
Average:				

Policy 25 List A

SIZING GUIDELINES

The following BMP's are approvable for use in the City of Knoxville. Each BMP may be approved to operate up to the flow rates listed below under normal conditions. The Engineering Director may require additional BMP's to be used in special circumstances (e.g. underground detention). The SPAP flow rate does not imply that the BMP will be acceptable at every site. Site characteristics will determine if a BMP is acceptable to be used. Please contact the Engineering Department for more detailed information pertaining to each listed BMP. This list is limited to the manufacturers who applied for approval based on the requirements stated in Policy 25 of the Land Development Manual.

AquaShield

AquaSwirl

Model	SPAP Flow (cfs)*	First Flush Flow (cfs)	Bypass Capacity (cfs)
AS-2	1.09	0.25	+
AS-3	1.85	0.48	+
AS-4	3.16	0.94	+
AS-5	4.37	1.4	+
AS-6	6.3	2.2	+
AS-7	8.57	3.3	+
AS-8	11.2	4.6	+
AS-9	14.17	6.1	+
AS-10	17.5	8.0	+
AS-11	21.2	10.1	+
AS-12	25.2	12.6	+
AS-13	29.6	15.4	+
AS-XX	Custom	Custom	Custom

May not be acceptable at every site. May be required to be off line.
+ Defined by diameter & slope of outlet pipe.

AquaFilter

Model (# of rows)	SPAP Flow (cfs)*	First Flush Flow (cfs)	Bypass Capacity (cfs)
1	0.44	0.44	**
2	0.88	0.88	**
3	1.32	1.32	**
4	1.76	1.76	**
5	2.2	2.2	**
6	2.64	2.64	**
7	3.08	3.08	**
8	3.52	3.52	**
9	3.96	3.96	**
10	4.4	4.4	**
11	4.84	4.84	**
12	5.28	5.28	**
13	5.72	5.72	**
14	6.16	6.16	**
15	6.6	6.6	**
16	7.04	7.04	**

May not be acceptable at every site.
** Must be used offline

Baysaver

BaySeparator

Model	SPAP Flow (cfs)*	First Flush Flow (cfs)	Bypass flow (cfs)
.5K	0.8	0.30	6.8
1K	1.1	0.41	7.6
3K	3.3	1.2	23
5K	6.8	2.5	48
10K	12.3	4.6	83

May not be acceptable at every site. May be required to be off line.

Contech

CDS

Model	SPAP Flow (cfs)*	First Flush Flow (cfs)	Bypass flow (cfs)
CDS 2015-4-C	0.7	0.63	10
CDS 2015-5-C	0.7	0.63	14
CDS 2020-5-C	1.1	0.99	14
CDS 2025-5-C	1.6	1.4	14
CDS 3020-6-C	2	1.8	20
CDS 3025-6-C	2.4	2.2	20
CDS 3030-6-C	3	2.7	20
CDS 3035-6-C	3.8	3.4	20
CDS 4030-8-C	4.5	4.1	30
CDS 4040-8-C	6	5.4	30
CDS 4045-8-C	7.5	6.8	30
CDS 5640-10-C	9	8.1	50
CDS 5653-10-C	14	12.6	50
CDS 5668-10-C	19	17.1	50
CDS 5678-10-C	25	22.5	50
CDS 3020-6-D	2	1.8	**
CDS 3030-6-D	3	2.7	**
CDS 3035-6-D	3.8	3.4	**
CDS 4030-8-D	4.5	4.1	**
CDS 4040-8-D	6	5.4	**
CDS 4045-8-D	7.5	6.8	**
CDS 5640-8-D	9	8.1	**
CDS 5653-8-D	14	12.6	**
CDS 5668-8-D	19	17.1	**
CDS 5678-8-D	25	22.5	**
CDS 10060-DV	30	27.0	**
CDS 10080-DV	50	45.0	**
CDS 100100-DV	64	57.6	**
CDS 150134-DC	148	133.2	**
CDS 200164-DC	270	243.0	**
CDS 240160-DC	300	270.0	**

May not be acceptable at every site. May be required to be off line.
** Must be used offline

CrystalStream Technologies

CrystalClean Separator

Model	SPAP Flow (cfs)*	First Flush Flow (cfs)	Bypass flow (cfs)**
646	1.4	0.5	8.4
846	1.9	0.7	11.2
856	2.3	0.9	14.0
866	2.8	1.1	18.9
956	2.6	1.0	17.5
1056	2.9	1.1	21.0
1246	2.8	1.1	16.8
1266	4.2	1.6	33.6
1686	7.4	2.8	44.8
1856	5.2	2.0	32.2
2056	5.8	2.2	35.0
2466	8.4	3.2	50.4

May not be acceptable at every site. May be required to be off line.
** with piped internal bypass option

Hydro International

Downstream Defender

Model	SPAP Flow (cfs)*	First Flush Flow (cfs)	Bypass flow (cfs)
4	2.2	1.4	3
6	6.1	4.0	8
8	12.4	8.1	15
10	21.7	14.2	25
12	34.3	22.4	38

May not be acceptable at every site. May be required to be off line.

First Defense

Model	SPAP Flow (cfs)*	First Flush Flow (cfs)	Bypass flow (cfs)
4ft	0.7	0.33	6.0
6ft	2.2	0.91	18

May not be acceptable at every site. May be required to be off line.

UpFlow Filter

Model	SPAP Flow (cfs)*	First Flush Flow (cfs)	Bypass flow (cfs)
1 Ring	0.33	0.33	6
2 Ring	0.66	0.66	12
3 Ring	1	1	18

May not be acceptable at every site. May be required to be off line.

Kristar

Filterra

Model	SPAP Flow (cfs)*	First Flush Flow (cfs)	Bypass flow (cfs)
4x4	0.052	0.060	+
4x6 or 6x4	0.078	0.080	+
4x8 or 8x4	0.104	0.110	+
6x6	0.117	0.120	+
6x8,8x6,4x12, or 12x4	0.156	0.160	+
6x10 or 10x6	0.194	0.200	+
6x12 or 12x6	0.233	0.240	+
7x13 or 13x7	0.295	0.310	+
FTIB-C 4x4-2	0.052	0.060	1.61
FTIB-C 6x4-4	0.078	0.080	3.23
FTIB-C 6x4-3	0.078	0.080	2.42
FTIB-C 6x4-2	0.078	0.080	1.61
FTIB-C 8x4-4	0.104	0.110	3.23
FTIB-C 8x4-3	0.104	0.110	2.42
FTIB-C 8x4-2	0.104	0.110	1.61
FTIB-C 6x6-4	0.117	0.120	3.23
FTIB-C 6x6-3	0.117	0.120	2.42
FTIB-C 6x6-2	0.117	0.120	1.61
FTIB-C 8x6-4	0.156	0.160	3.23
FTIB-C 8x6-3	0.156	0.160	2.42
FTIB-C 8x6-2	0.156	0.160	1.61
FTIB-C 10x6-4	0.194	0.200	3.23
FTIB-C 10x6-3	0.194	0.200	2.42
FTIB-C 10x6-2	0.194	0.200	1.61
FTIB-C 12x6-4	0.233	0.240	3.23
FTIB-C 12x6-3	0.233	0.240	2.42
FTIB-C 12x6-2	0.233	0.240	1.61
FTIB-C 13x7-4	0.295	0.310	3.23
FTIB-C 13x7-3	0.295	0.310	2.42
FTIB-C 13x7-2	0.295	0.310	1.61
FTIB-P 6x4	0.078	0.080	2.25
FTIB-P 8x4	0.104	0.110	2.25
FTIB-P 6x6	0.117	0.120	2.25
FTIB-P 8x6	0.156	0.160	3.80
FTIB-P 10x6	0.194	0.200	3.80
FTIB-P 12x6	0.233	0.240	3.80
FTIB-P 13x7	0.295	0.310	3.80

May not be acceptable at every site. May be required to be off line.
+ Provided by downstream curb inlet or other structure

Flowgard Dual Vortex

Model	SPAP Flow (cfs)*	First Flush Flow (cfs)	Bypass flow (cfs)
DVS-36	0.5	0.27	4
DVS-48	1.25	0.56	9
DVS-60	2.5	0.98	16
DVS-72	4.25	1.5	27
DVS-84	6.5	2.3	40
DVS-96	9.5	3.2	57
DVS-120	16.8	5.5	99
DVS-144	26.4	8.7	154

May not be acceptable at every site. May be required to be off line.

Flowgard Perk Filter

Cartridge Size	SPAP Flow per Cartridge (cfs)*	First Flush Flow per Cartridge (cfs)	Bypass flow (cfs)
12”	0.026	0.026	#
18”	0.04	0.04	#

May not be acceptable at every site. May be required to be off line.
based on vault size and number of cartridges

Suntree

NSBB

Model	SPAP Flow (cfs)*	First Flush Flow (cfs)	Minimum distance from pipe invert to vault ceiling	Bypass flow (cfs)
NSBB 2-4	1.3	0.4	19”	+
NSBB 3-6	3	1	23”	+
NSBB 3-8	4	1.3	23”	+
NSBB 4-8	8	1.8	32”	+
NSBB 5-10	15	2.8	32”	+
NSBB 6-12	24	4.0	32”	+
NSBB 7-14	28	5.5	36”	+
NSBB 8-12	27	5.4	32”	+
NSBB 8-14	32	6.3	40”	+
NSBB 8-16	40	7.1	40”	+
NSBB 9-18	45	8.9	42”	+
NSBB 10-14	44	7.7	40”	+
NSBB 10-16	50	8.8	42”	+
NSBB 10-20	55	11	48”	+
NSBB 12-20	66	13.2	54”	+
NSBB 12-24	72	15.8	54”	+

May not be acceptable at every site. May be required to be off line.
+ Defined by diameter & slope of outlet pipe

Policy 26

UTILITY MAINTENANCE AND CONSTRUCTION

Introduction

In order to maintain the quality and durability of streets and sidewalks within public rights-of-way, promote an attractive environment for economic growth and to minimize any detrimental effect on storm water quality and facilities, the City of Knoxville provides the following policy for the non-emergency repair and improvement of utilities within the corporate limits of the City of Knoxville.

Permit Requirements

Utility construction performed within the City of Knoxville requires a site development permit and for construction in right-of-way, a right-of-way permit. The Site Development Permit is established by City of Knoxville Code, Chapter 22.5 - Stormwater. The Right-of-Way Permit is established by City of Knoxville Code, Chapter 23 - Streets and Sidewalks. Both Chapter 22.5 & 23 are included in Appendix I.

Site Development Permit for Utilities

Any utility construction resulting in a disturbed area within the corporate limits of the City of Knoxville requires a site development permit. Site development permits for utility construction can be obtained by contacting the City of Knoxville Engineering Division, 1400 Loraine Street at 215-6100. Upon permit approval, the utility company shall notify the Engineering Division at 215-6100 as to when the construction will begin. Site Development Permits for utility construction are classified into two categories, Site Development Utility Maintenance Permits and Site Development Utility Construction Permits.

Site Development Permit for Utility Maintenance

The City of Knoxville grants an annual Site Development Maintenance Permit to utility companies. This permit is for routine maintenance within the corporate limits of the City of Knoxville, i.e. service connections, emergency repairs, setting of poles, construction within areas already covered by permits of others (i.e. developers) or any maintenance/construction activities that result in a disturbed area of less than 20 square yards. Disturbed areas greater than 20 square yards shall be considered construction activities and permit fees will be assessed in accordance with Knoxville City Code Chapter 22.5, Section 22.5-29, Fees. The utility company shall notify the Civil Engineering Section before any construction activities begin.

As a condition of the annual utility Site Development Maintenance Permit, the utility company will utilize best management practices (BMP's) for erosion and sediment control. These BMP's will comply with the Erosion and Sediment Control Handbook produced by the Tennessee Department of Environment and Conservation, dated March 2002, as amended by that organization or its successor, or the City of Knoxville's Best Management Practices (BMP) Manual, whichever is more restrictive.

The fee for this permit will be based upon the report of disturbed area information, i.e. date, location, size of area disturbed, which is tabulated by the utility and forwarded on a monthly basis to the City of Knoxville Engineering Division, 1400 Loraine Street. The Site Development Maintenance Permit fee will be billed annually to the utility company for the previous year. The actual cost will be based upon the total area disturbed and will be billed in accordance with the rate structure as found in the Knoxville City Code, Chapter 22.5, Section 22.5-29, Fees. The rate structure is as follows:

Disturbed Area: $15.00 for 20 square yards or less plus $0.50 per each additional square yard The minimum charge for the issuance of any permit shall be fifteen dollars ($15.00).

The Engineering Division shall determine permit fees for utilities currently subject to a court order or decree.

Site Development Permit for Utility Construction

The City of Knoxville grants a Site Development Construction Permit on a per-project basis to utility companies. This permit is for any non-maintenance utility construction within the corporate limits of the City of Knoxville. Utility construction project plans, a permit and permit review checklist must be submitted to the City of Knoxville Engineering Division, 1400 Loraine Street at least 12 business days in advance of the work. The utility construction site development permit and permit review checklist are included in Appendix IV of this policy. Upon permit approval, the utility company shall notify the Engineering Division at 215-6100 as to when the construction will begin.

The utility company shall meet the requirements for the Site Development Permit as set forth in City of Knoxville Code, Chapter 22.5 – Stormwater. Specifically, the utility construction plans shall contain the items included in the Utility Construction Site Development Permit Review Checklist.

An erosion and sediment control plan must be submitted with the Utility Site Development Construction Permit and approved before the permit will be issued. Erosion and sediment control plans are to be prepared and sealed by a competent professional engineer registered in the State of Tennessee. The erosion and sediment control plan must comply with the Erosion and Sediment Control Handbook produced by the Tennessee Department of Environment and Conservation, dated March 2002, as amended by that organization or its successor, or the City of Knoxville's Best Management Practices (BMP) Manual, whichever is more restrictive.

The City will invoice on a quarterly basis for fees associated with Utility Site Development Construction Permits. As set forth in the City of Knoxville Code, Chapter 22.5, Section 22.5-29, Fees, the Site Development Construction Permit fee is $1.00 per linear foot of pipe as shown on the construction plans with a $200 minimum fee per project.

The utility shall not pay any Site Development Permit fees for any work where the utility has obtained and paid fees for work as part of a Right-of-Way Permit. If a utility project requires work within the right-of-way and on private property, the utility shall pay Right-of-Way Permit fees for the limits of work within the right-of-way and Site Development Permit fees for the limits of work on private property.

The Engineering Division shall determine permit fees for utilities currently subject to a court order or decree.

Right-of-Way Permit

A Right-of-Way Permit is required for any project that requires grading, tree trimming, clearing, excavation or construction within public right-of-way. This permit can be obtained by contacting the Engineering Division, 1400 Loraine Street at 215-6100. Right-of-Way Permits for construction activity are classified into two categories, Maintenance Permits and Construction Permits.

Right-of-Way Maintenance Permit

The City of Knoxville will grant utility companies an annual Right-of-Way Maintenance Permit. This permit is for routine maintenance within the city right-of-way, i.e. service connections, emergency repairs, setting of poles, construction within areas already covered by permits of others (i.e. developers) or any maintenance/construction activities that result in a disturbed area of less than 20 square yards. Disturbed areas greater than 20 square yards shall be considered construction activities and permit fees will be assessed in accordance with the Right-of-Way Construction Permit Section as found on page 5 of this policy. The utility company shall notify the Civil Engineering Section before any construction activities begin.

The fee for this permit will be based upon the report of cut information, i.e. date, location, size of cut, which is tabulated by the utility and forwarded on a monthly basis to the City of Knoxville Engineering Division, 1400 Loraine Street. Utility companies may submit for review bored line extensions outside the pavement edge that are less than 500 feet long and 2-inches or less in diameter as a maintenance permit. The cost assessed for a bored line extension is $0.10 per linear foot or a minimum of $15.00 per boring.

The Right-of-Way Maintenance Permit fee will be billed annually to the utility company for the previous year. The actual cost will be based upon the following rate structure.

Classification	Maximum 20 Sq. Yds. Or less
Pavement or sidewalk	$15.00
Earth or gravel	$5.00

The minimum charge for the issuance of any permit shall be five dollars ($5.00).

As part of the maintenance permit, a temporary traffic control permit (TTCP) may be required for each location. See the "Policy on Work Zone Traffic Control" dated September 11, 2009 as found in Section 34.0, Standard Specification for Construction Area Traffic Control of Appendix II. Traffic control plans for the following require a plan prepared and sealed by a professional engineer registered in the State of Tennessee:

1. Any construction on a State route requiring multi-lane closures or a full road closure. A list of State routes within the corporate limits of the City of Knoxville is included in Appendix III.
2. Any construction requiring a detour on any roadway.

Personnel trained in work zone traffic control procedures may prepare traffic control plans for all other situations. A copy of the Temporary Traffic Control Permit is attached in Appendix III. All traffic control procedures must meet the requirements as set forth in Section 34.0, Standard Specifications for Construction Area Traffic Control, as found in Appendix II.

Right-of-Way Construction Permit

The City of Knoxville will grant utility companies a permit for construction in the right-of-way for all new construction on a per-project basis. Each new construction project must be submitted to the City of Knoxville Engineering Division 1400 Loraine Street at least 12 business days in advance of the work. Upon permit approval, the utility shall notify the Civil Engineering Section at 215-6100 as to when the construction will begin. The City will invoice on a quarterly basis for fees associated with construction permits.

The cutting of a street to install utilities results in long-term damage sustained to the street throughout its life. It also results in problems associated with work zone traffic control and inconvenience to the public when maintenance is required throughout the life of the system located under the pavement. For these reasons, the Engineering Division will carefully review the necessity to locate utility facilities under the pavement.

However, recognizing there will be cases where there will be construction on the right-of-way and/or under the pavement the following permit fee structure will apply:

1. $1.00 per linear foot of pipe within the right-of-way as shown on the construction plans. This fee is $0.10 per linear foot of bored pipe within the right-of-way, or a minimum of $15.00 per boring.
2. $10.00 per linear foot of pipe which is constructed under the pavement of the street and only surface destruction occurs. This $10.00 fee is to cover the current cost of resurfacing a 12-foot wide section of roadway. Exceptions to this fee shall be as follows:
    a. When the street is on the current city paving list the utility would pay nothing.

b. When the street has been resurfaced within five years or less, the utility would pay $20.00 per linear foot, i.e. the current cost of paving two 12-foot wide sections of street.

c. In cases when there are deep trenches and subgrade destruction as well as surface destruction, the utility will be billed on a case-by-case basis for the cost of roadway restoration.

As part of the construction permit, a Temporary Traffic Control Permit may be required. See the "Policy on Work Zone Traffic Control" dated September 11, 2009 as found in Section 34.0, Standard Specification for Construction Area Traffic Control of Appendix II. A traffic control plan must be submitted with the construction permit and approved before the permit will be issued. Traffic control plans for the following require a plan prepared and sealed by a professional engineer registered in the State of Tennessee:

1. Any construction on a State route requiring multi-lane closures or a full road closure. A list of State routes within the corporate limits of the City of Knoxville is included in Appendix III.
2. Any construction requiring a detour on any roadway.

Personnel trained in work zone traffic control procedures may prepare traffic control plans for all other situations. A copy of the Temporary Traffic Control Permit is attached in Appendix III. All traffic control procedures must meet the requirements as set forth in Section 34.0, Standard Specifications for Construction Area Traffic Control, as found in Appendix II.

Right-of-Way Construction Notes

Any utility work within right-of-way requiring excavation or tree cutting/trimming for utility maintenance or improvement should be repaired such that it is left in equal or better condition than prior to the work. The removal of trees will in some cases require the planting of new trees. The Engineering Division may require deteriorated areas adjacent to the construction be nominally improved during the repair of utility related cuts. The following are additional construction requirements:

1. Any construction which occurs under the roadway, curbs, gutters, sidewalks or less than three (3) feet from the outside edge of the roadway section shall be backfilled with Mineral Aggregate Base as detailed on the Standard Detail for Trench Cut Repairs, page 8. Stone classified as No. 57 or 67 by the Tennessee Department of Transportation Standard Specifications shall not be used for trench backfilling without prior approval by the Engineering Division.
2. Any construction which occurs three (3) feet from the outside edge of the roadway section, but within right-of-way shall be backfilled with fine compactable soil free of sod, brush, roots, and other perishable material and stones having a maximum dimension of more than six (6) inches. Also, this material shall be compacted in layers of not more than six (6) inches to 95% of the Standard Proctor Density at the optimum moisture content as determined by AASHTO T99, Method D. These areas should be repaired such that they are left in equal or better condition than prior to the work. This includes matching existing materials such as rip rap, concrete ditch or etc. The utility company shall furnish the Engineering Division with the Standard Proctor Compaction curve for any soil used for trench backfill material.
3. All utility cuts must be repaired immediately after backfilling and in accordance with the Standard Detail for Trench Cut Repairs, page 8.
4. All references to materials are described in detail in the City of Knoxville's Standard Specifications, which are attached in the Appendix II.
5. All concrete cuts shall occur at contraction or expansion joints only. Where existing construction and expansion joints are encountered in concrete pavement cuts, the Engineering Division shall designate location, size and materials to construct joints in the new concrete surface.

6. All asphalt and concrete cuts shall be saw-cut to provide a smooth edge. Jackhammering the edges of the cut is not acceptable.
7. Remove and replace full concrete sidewalk and concrete street panels. Do not cut trenches or form new joints in the concrete sidewalk or concrete street. In the case of an extremely wide area the Engineering Division may approve creating limited new joints to accommodate replacing only part of the area.
8. All accessible ramps must meet the City of Knoxville's Standard Detail, COK-13, Standard Detail for Curb Cuts and Tactile Warning Systems.
9. The subsurface shall be compacted according to the Standard Specification for Mineral Aggregate Base, Section 5.0.
10. Existing concrete streets that have been overlaid with asphalt shall be repaired with asphalt. The depth of the asphalt replacing the concrete shall be increased 50% (plus any overlay). Thus, the total asphalt depth shall be 1.5 times the concrete thickness plus the asphalt overlay thickness.
11. Surface textures and colors shall match, as close as possible, the existing surface.
12. Sidewalks in historical areas shall be replaced with concrete meeting the requirements of Technical Specification 15.0, Concrete, with the exceptions of the concrete mix design shall contain natural brown silica sand and no fly ash.
13. Brick, or other specialty paving, shall be repaired using identical materials (e.g., brick or paver color and size, mortar color), and reconstructed to match existing line and grade.
14. Replace painted surface markings such as lane lines, carefully matching the existing markings. Thermoplastic markings such as crosswalks, turn arrows, and STOP lines shall be replaced by the Engineering Division at the utility's expense. Upon completion of construction, the Engineering Division's Traffic Section shall be notified at 215-6100 to allow for the replacement of Thermoplastic markings destroyed by the utility company.
15. All utility installations resulting in obstructions in the right-of-way shall meet the clear zone requirement of the City of Knoxville. Currently the clear zone distance is 10 feet measured from the edge of pavement or face of concrete curb to the obstruction. Any encroachment upon this clear zone must be approved by the Engineering Division. However, in no case shall an obstruction be placed within an existing sidewalk without prior approval from the Engineering Division.

REVISIONS			
No.	DATE	BY	BRIEF DESCRIPTION

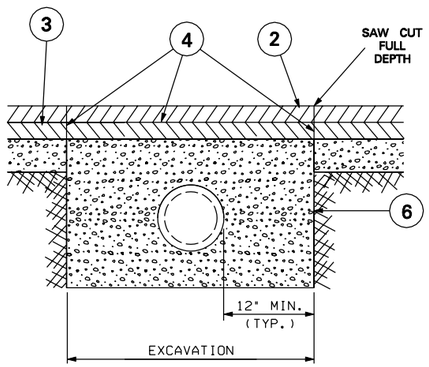

ASPHALT STREET REPAIR

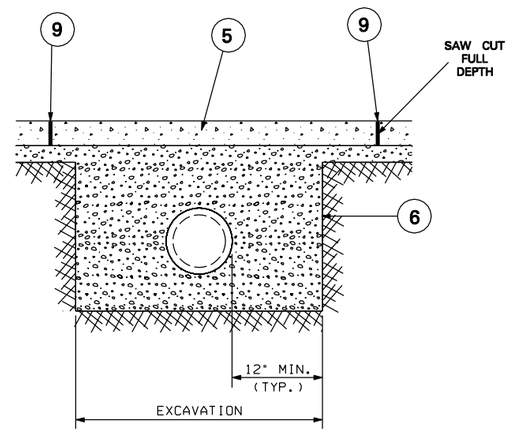

CONCRETE STREET REPAIR

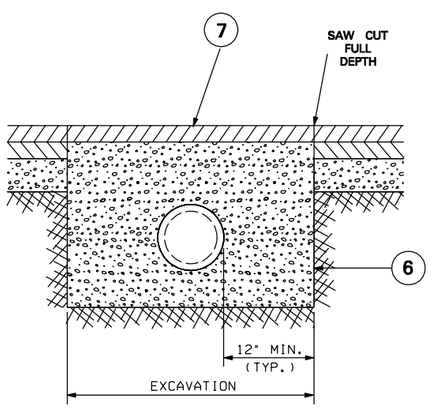

TEMPORARY ASPHALT STREET REPAIR

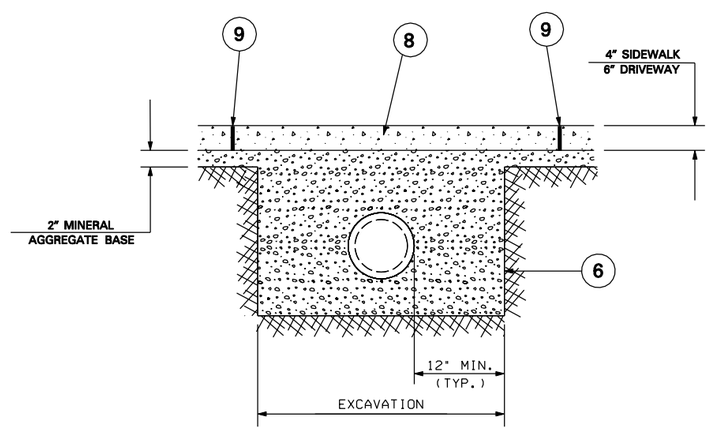

CONCRETE SIDEWALK / DRIVEWAY REPAIR

NOTES:

1. ALL SECTIONS NOTED BELOW REFERENCE THE CITY OF KNOXVILLE STANDARD SPECIFICATIONS UNLESS OTHERWISE SPECIFIED.
2. ASPHALTIC CONCRETE SURFACE, GRADING D, SECTION 10.0. MATCH EXISTING DEPTH OR MINIMUM THICKNESS OF ONE AND ONE-HALF (1.5) INCHES.
3. BITUMINOUS PLANT MIX BASE, GRADING B, B-M, OR C, SECTION 9.0. MATCH EXISTING DEPTH OR MINIMUM THICKNESS OF TWO AND ONE-HALF (2.5) INCHES. THE ENTIRE FOUR (4) INCH MINIMUM DEPTH MAY BE ASPHALTIC CONCRETE SURFACE GRADING D, BUT SHALL BE COMPACTED IN TWO LIFTS.
4. TACK COAT, SECTION 7.0.
5. PORTLAND CEMENT CONCRETE PAVEMENT, SECTION 11.0. JOINTS SHALL BE DOWELED AS DETAILED IN SECTION 11.0.
6. MINERAL AGGREGATE BASE, CLASS A AGGREGATE GRADING D, SECTION 5.0, COMPACTED IN SIX (6) INCH LIFTS TO 100% OF THE STANDARD PROCTOR DENSITY AT 2% LESS THAN OPTIMUM MOISTURE CONTENT AS DETERMINED BY AASHTO T99, METHOD D, APPROXIMATELY 140 PCF FOR LIMESTONE.
7. WHEN A TEMPORARY ASPHALT PATCH IS USED, IT SHALL BE PLACED IMMEDIATELY AFTER THE MINERAL AGGREGATE BACKFILL. ALL TEMPORARY REPAIRS MUST BE REPLACED PERMANENTLY WITHIN 90 DAYS.
8. CONCRETE SIDEWALKS, DRIVEWAYS, AND MEDIAN STRIP, SECTION 13.0.
9. LIMITS OF REMOVAL SHALL BE FROM THE NEAREST EXPANSION OR CONTRACTION JOINT.
10. EXISTING CONCRETE STREETS THAT HAVE BEEN OVERLAID WITH ASPHALT SHALL BE REPAIRED WITH ASPHALT. THE DEPTH OF THE ASPHALT REPLACING THE CONCRETE SHALL BE INCREASED 50% (PLUS ANY OVERLAY). THUS, THE TOTAL DEPTH SHALL BE 1.5 TIMES THE CONCRETE THICKNESS PLUS THE ASPHALT OVERLAY THICKNESS.

CITY OF KNOXVILLE DEPARTMENT OF ENGINEERING	DRAWN: RW DESIGNED: RLT DATE: 16-JAN-02 CHECKED: RLT APPROVED: DTH
STANDARD DETAIL FOR TRENCH CUT REPAIRS	COK–12

Street Lighting and Overhead Wiring

Central Business District

City planning groups have made long range projections of where it would be desirable for future development to take place in the Central Business Improvements District (CBID). The attached map provides the specific boundaries and these boundaries include the entire right-of-way of boundary streets. Planning between the City and utility companies should be developed to accommodate utility facilities. Utility drawings should include clear and concise instructions for underground installation.

Utility companies are required to use existing underground facilities or alleys in the CBID area thereby eliminating all overhead wiring to improve the aesthetics of the area.

Street Lights

1. **ALL** street light additions or replacements should be in accordance with the agreed upon *STREET LIGHT PLAN; (e.g.* do not add ANY new cobraheads, even if only **one** is being installed--that is one more to replace later).
2. Cobraheads on wooden or other utilitarian poles may be installed as part of the Asentry@ program on **private property.**

Overhead Wiring

1. All new or upgraded street lights should be fed through underground wiring ONLY.
2. NO new overhead wire should be added (or replaced in the event of non-emergency repair) in the downtown area, except with the express, written consent of the Director of Engineering. The exception will be granted only in cases where underground connection presents an extreme hardship AND where a reasonable alternative, which does not detract from the visual quality of the area, is proposed (e.g. running overhead wire service along an alley).
3. Installation of conduit or other equipment required to provide underground service should be done in accordance with the policies related to repair of utility cuts (see previous section).

Any exceptions or variances from this policy must be approved in writing by the Director of Engineering prior to beginning of work. Failure to secure prior approval of exceptions will result in corrections being required after the fact.

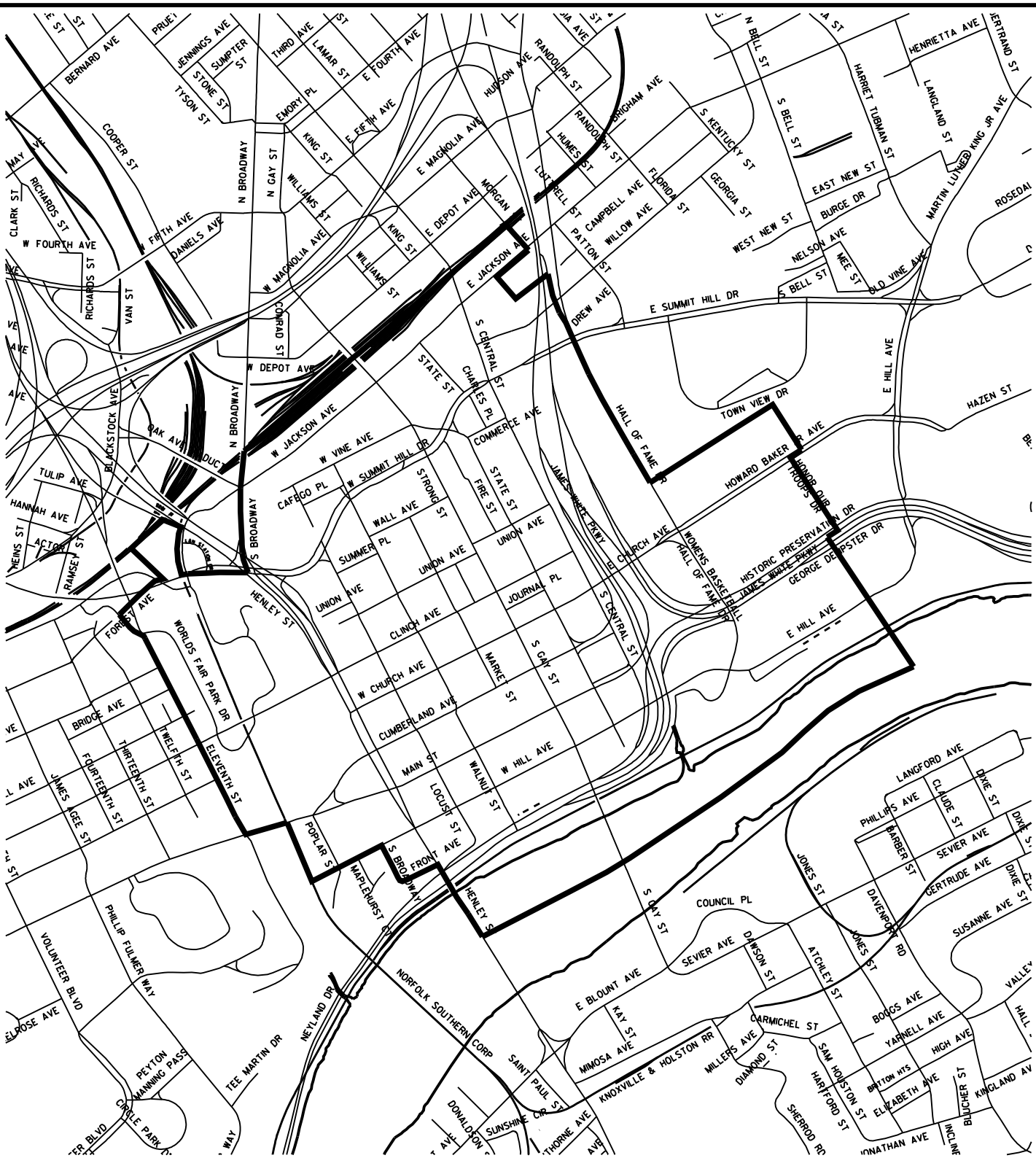

CITY OF KNOXVILLE

CENTRAL BUSINESS IMPROVEMENT DISTRICT (CBID)

APPENDIX I

Knoxville City Code

Chapter 22.5 – Stormwater and Streets

Chapter 23 - Streets and Sidewalks

APPENDIX II

Select Technical Specifications

Table of Contents

Section 5.0	Mineral Aggregate Base
Section 7.0	Tack Coat
Section 9.0	Bituminous Plant Mix Base
Section 10.0	Asphaltic Concrete Surface
Section 11.0	Portland Cement Concrete Pavement (Plain)
Section 12.0	Concrete Curb, Gutter, and Combined Curb And Gutter
Section 13.0	Concrete Sidewalks, Driveways, and Median Strip
Section 15.0	Concrete
Section 31.0	Temporary Water Pollution Control
Section 34.0	Construction Area Traffic Control

APPENDIX III

TEMPORARY TRAFFIC CONTROL PERMIT

STATE ROUTES

APPENDIX IV

SITE DEVELOPMENT PERMIT FOR UTILITY CONSTRUCTION

UTILITY CONSTRUCTION SITE DEVELOPMENT PERMIT REVIEW CHECKLIST

Policy 27
QUALIFIED LOCAL PROGRAM
CONSTRUCTION GENERAL PERMIT

PART 1 COVERAGE UNDER THIS GENERAL POLICY 5

1.1 Policy Area 5

1.2 Discharges Covered by this Policy 5
1.2.1 Stormwater discharges associated with construction activities 5
1.2.2 Stormwater discharges associated with construction support activities 5
1.2.3 Non-stormwater discharges authorized by this permit 6
1.2.4 Other NPDES-permitted discharges 6

1.3 Limitations on Coverage 6

1.4 Obtaining Policy Coverage 8
1.4.1 Notice of Intent (NOI) 8
1.4.2 Stormwater Pollution Prevention Plan (SWPPP) 8
1.4.3 Permit application fees 8

1.5 Effective Date of Coverage 9
1.5.1 Notice of Coverage (NOC) 9
1.5.2 Permit tracking numbers 9

PART 2 NOTICE OF INTENT (NOI) REQUIREMENTS 10

2.1 Who Must Submit an NOI? 10

2.2 Typical Construction Site Operators 10
2.2.1 Owner/Developer 10
2.2.2 Commercial builders 10
2.2.3 Contractors 11

2.3 Responsibilities of Operators 11
2.3.1 Permittee(s) with design control (owner/developer) 11
2.3.2 Permittee(s) with day-to-day operational control (contractor–secondary permittee) 12

2.4 NOI Submittal 12
2.4.1 Existing site 12
2.4.2 Application for new policy coverage 12
2.4.3 New operator 12
2.4.4 Late NOIs 13

2.5 Who Must Sign the NOI? 13

2.6 NOI Form ... 13
2.6.1 Contents of the NOI form ... 13
2.6.2 Construction site map ... 13
2.6.3 Application completeness ... 14

2.7 Where to Submit the NOI, SWPPP and Permitting Fee? ... 14

PART 3 STORMWATER POLLUTION PREVENTION PLAN (SWPPP) REQUIREMENTS ... 14

3.1 The General Purpose of the SWPPP ... 14
3.1.1 Registered engineer or landscape architect requirement ... 15
3.1.2 Site Assessment ... 15

3.2 SWPPP Preparation and Compliance ... 16
3.2.1 Existing site ... 16
3.2.2 New site ... 16

3.3 Signature Requirements, Plan Review and Making Plans Available ... 16
3.3.1 Signature Requirements for a SWPPP ... 16
3.3.2 SWPPP Review ... 16
3.3.3 Making plans available ... 16

3.4 Keeping Plans Current ... 16
3.4.1 WPPP modifications ... 16

3.5 Components of the SWPPP ... 17
3.5.1 Site description ... 17
3.5.2 Description of stormwater runoff controls ... 18
3.5.3 Erosion prevention and sediment controls ... 19
3.5.4 Stormwater management ... 22
3.5.5 Other items needing control ... 23
3.5.6 Approved local government sediment and erosion control requirements ... 23
3.5.7 Maintenance ... 23
3.5.8 Inspections ... 23
3.5.9 Pollution prevention measures for non-stormwater discharges ... 25
3.5.10 Documentation of policy eligibility related to Total Maximum Daily Loads (TMDL) ... 25

PART 4 CONSTRUCTION AND DEVELOPMENT EFFLUENT GUIDELINES ... 25

4.1 Non-Numeric Effluent Limitations ... 25
4.1.1 Erosion Prevention and Sediment Controls ... 25
4.1.2 Buffer zone requirements ... 26
4.1.3 Soil stabilization ... 27
4.1.4 Dewatering ... 27
4.1.5 Pollution prevention measures ... 27
4.1.6 Prohibited discharges ... 27
4.1.7 Surface outlets ... 27

PART 5 SPECIAL CONDITIONS, MANAGEMENT PRACTICES, AND OTHER NON-NUMERIC LIMITATIONS 28

5.1. Releases in Excess of Reportable Quantities 28

5.2. Spills 28

5.3. Discharge Compliance with State Water Quality Standards 28
5.3.1 Violation of Water Quality Standards 28
5.3.2 Discharge quality 28

5.4 Discharges into Impaired or Exceptional Tennessee Waters 29
5.4.1 Additional SWPPP/BMP Requirements for discharges into impaired or exceptional TN Waters 29
5.4.2 Buffer zone requirements for discharges into impaired or exceptional TN waters 30
5.4.3 Pre-Approved sites 31

PART 6 RETENTION, ACCESSIBILITY AND SUBMISSION OF RECORDS 31

6.1 Documents 31

6.2 Accessibility and Retention of Records 31
6.2.1 Posting information at the construction site 31

6.3 Electronic Submission of NOIs, NOTs and Reports 32

PART 7 STANDARD POLICY CONDITIONS 32

7.1 Duty to Comply 32
7.1.1 Permittee's duty to comply 32
7.1.2 Penalties for violations of policy conditions 32
7.1.3 Civil and criminal liability 32
7.1.4 Liability under state law 32

7.2 Continuation of the Expired General Permit 32

7.3 Need to Halt or Reduce Activity Not a Defense 33

7.4 Duty to Mitigate 33

7.5 Duty to Provide Information 33

7.6 Other Information 33

7.7 Signatory Requirements 33
7.7.1 Signatory requirements for a Notice of Intent (NOI) 33
7.7.2 Signatory requirements for reports and other items 34
7.7.3 Duly authorized representative 34
7.7.4 Changes to authorization 35
7.7.5 Signatory requirements for primary permittees 35
7.7.6 Signatory requirements for secondary permittees 35

7.8 Penalties for Falsification of Reports 35

7.9 Oil and Hazardous Substance Liability 35

7.10 Property Rights **36**

7.11 Severability **36**

7.12 Requiring an Individual Permit **36**
7.12.2 Permittee may request individual permit instead of coverage under this general permit 36
7.12.3 Individual permit terminates general permit 36

7.13 Other, Non-Stormwater, Program Requirements **36**

7.14 Proper Operation and Maintenance **36**

7.15 Inspection and Entry **37**

7.16 Policy Actions **37**

PART 8 REQUIREMENTS FOR TERMINATION OF COVERAGE **37**

8.1 Termination of Developer and Builder Coverage **37**
8.1.1 Termination process for primary permittees 37
8.1.2 Notice of Termination (NOT) review 38

8.2 Termination of Builder and Contractor Coverage **38**
8.2.1 Termination process for secondary permittees 38

8.3 NOT certification **38**

8.4 Where to Submit a Notice of Termination (NOT)? **39**

PART 9 AQUATIC RESOURCE ALTERATION PERMITS (ARAP) **39**

PART 10 DEFINITIONS **39**

PART 11 LIST OF ACRONYMS **45**

QLP APPENDIX A – Notice of Intent (NOI) Form

QLP APPENDIX B – Notice of Termination (NOT) Form

QLP APPENDIX C – Inspection Report Form

QLP APPENDIX D – Stormwater Monitoring Report Form

SECTION 1 COVERAGE UNDER THIS GENERAL POLICY

1.1 POLICY AREA

This construction general permit (CGP) covers all areas of the City of Knoxville.

1.2 DISCHARGES COVERED BY THIS POLICY

1.2.1 Stormwater discharges associated with construction activities

This policy authorizes point source discharges of stormwater from construction activities including clearing, grading, filling and excavating (including borrow pits and stockpile/material storage areas containing erodible material), or other similar construction activities that result in the disturbance of one acre or more of total land area. Projects or developments of less than one acre of land disturbance are required to obtain authorization under this policy if the construction activities at the site are part of a larger common plan of development or sale that comprise at least one acre of land disturbance. One or more site operators must maintain coverage under this policy for all portions of a site that have not been finally stabilized.

Projects or developments of less than one acre of total land disturbance may also be required to obtain authorization under this policy if:

a) the director has determined that the stormwater discharge from a site is causing, contributing to, or is likely to contribute to a violation of a state water quality standard;
b) the director has determined that the stormwater discharge is, or is likely to be, a significant contributor of pollutants to waters of the state, or
c) changes in state or federal rules require sites of less than one acre that are not part of a larger common plan of development or sale to obtain a stormwater permit.

Note: Any discharge of stormwater or other fluid to an improved sinkhole or other injection well, as defined, must be authorized by policy or rule as a Class V underground injection well under the provisions of Tennessee Department of Environment and Conservation (TDEC) Rules, Chapter 1200-4-6.

1.2.2 Stormwater discharges associated with construction support activities

This policy also authorizes stormwater discharges from support activities associated with a permitted construction site (e.g., concrete or asphalt batch plants, equipment staging yards, material storage areas, excavated material disposal areas, borrow areas) provided all of the following are met:

a) The support activity is primarily related to a construction site that is covered under this general permit;
b) The operator of the support activity is the same as the operator of the construction site;
c) The support activity is not a commercial operation serving multiple unrelated construction projects by different operators;
d) The support activity does not operate beyond the completion of the construction activity of the last construction project it supports; and
e) Support activities are identified in the Notice of Intent (NOI) and the Stormwater Pollution Prevention Plan (SWPPP). The appropriate erosion prevention and sediment controls and measures applicable to the support activity shall be described in a comprehensive SWPPP covering the discharges from the support activity areas.

Stormwater discharges associated with support activities that have been issued a separate individual permit or an alternative general permit are not authorized by this general permit. This policy does not authorize any process wastewater discharges from support activities. Process wastewater discharges from support activities must be authorized by an individual permit or other appropriate general permit.

1.2.3 Non-stormwater discharges authorized by this policy

The following non-stormwater discharges from active construction sites are authorized by this policy provided the non-stormwater component of the discharge is in compliance with section 3.5.9 below (*Pollution prevention measures for non-stormwater discharges*):

a) Dewatering of work areas of collected stormwater and ground water (filtering or chemical treatment may be necessary prior to discharge);
b) Waters used to wash vehicles (of dust and soil, not process materials such as oils, asphalt or concrete) where detergents are not used and detention and/or filtering is provided before the water leaves site;
c) Water used to control dust in accordance with section 3.5.5 below (*Other items needing control)*;
d) Potable water sources including waterline flushings from which chlorine has been removed to the maximum extent practicable;
e) Routine external building washdown that does not use detergents or other chemicals;
f) Uncontaminated groundwater or spring water; and
g) Foundation or footing drains where flows are not contaminated with pollutants (process materials such as solvents, heavy metals, etc.).

All non-stormwater discharges authorized by this policy must be free of sediment or other solids and must not cause erosion of soil or the stream bank, or result in sediment impacts to the receiving stream.

1.2.4 Other NPDES-permitted discharges

Discharges of stormwater or wastewater authorized by and in compliance with a different National Pollutant Discharge Elimination System (NPDES) permit (other than this permit) may be mixed with discharges authorized by this permit.

1.3. LIMITATIONS ON COVERAGE

Except for discharges from support activities, as described in section 1.2.2 above (*Stormwater discharges associated with construction support activities*) and certain non-stormwater discharges listed in section 1.2.3 above (*Non-stormwater discharges authorized by this permit*), all discharges covered by this policy shall be composed entirely of stormwater. This policy does not authorize the following discharges:

a) Post-Construction Discharges (Permanent Stormwater Management) -Stormwater discharges associated with construction activity that originate from the construction site after construction activities have been completed, the site has undergone final stabilization, and the coverage under this policy has been terminated.
b) Discharges Mixed with Non-Stormwater - Discharges that are mixed with sources of non-stormwater, other than discharges which are identified in section 1.2.4 above (*Other NPDES-permitted discharges*), and in compliance with section 3.5.9 below (*Pollution prevention measures for non-stormwater discharges*) of this permit.
c) Discharges Covered by Another Permit - Stormwater discharges associated with construction activity that have been issued an individual permit in accordance with subpart 7.12 below (*Requiring an Individual Permit*).
d) Discharges Threatening Water Quality - Stormwater discharges from construction sites that the director determines will cause, have the reasonable potential to cause, or contribute to violations of water quality standards. Where such determination has been made, the discharger will be notified by the director in writing that an individual permit application is necessary as described in subpart 7.12 below (*Requiring an Individual Permit*). However, the department may authorize coverage under this policy after appropriate controls and implementation procedures have been included in the SWPPP that are designed to bring the discharge into compliance with water quality standards.

e) Discharges into Impaired Streams – This policy does not authorize discharges that would add loadings of a pollutant that is identified as causing or contributing to the impairment of a water body on the list of impaired waters. Impaired waters means any segment of surface waters that has been identified by the department as failing to support its designated classified uses. Compliance with the additional requirements set forth in subpart 5.4 (*Discharges into Impaired or Exceptional Tennessee Waters*) is not considered as contributing to loadings to impaired waters or degradation unless the department determines upon review of the SWPPP that there is a reason to limit coverage as set forth in paragraph d) above and the SWPPP cannot be modified to bring the site into compliance.

f) Discharges into Outstanding National Resource Waters - The director shall not grant coverage under this policy for discharges into waters that are designated by the Water Quality Control Board as Outstanding National Resource Waters (ONRWs). Designation of ONRWs are made according to TDEC Rules, Chapter 1200-4-3-.06.

g) Discharges into Exceptional Quality Waters - The director shall not grant coverage under this policy for potential discharges of pollutants which would cause degradation to waters designated by TDEC as exceptional quality waters (see subpart 5.4 (*Discharges into Impaired or Exceptional Tennessee Waters* for additional policy requirements). Compliance with the additional requirements set forth in subpart 5.4 is not considered as contributing to loadings to exceptional quality waters or degradation unless the department determines upon review of the SWPPP that there is a reason to limit coverage as set forth in paragraph d) above and the SWPPP cannot be modified to bring the site into compliance. Identification of exceptional quality waters is made according to TDEC Rules, Chapter 1200-4-3-.06.

h) Discharges Not Protective of Federal or State listed Threatened and Endangered Species, Species Deemed in Need of Management or Special Concern Species - Stormwater discharges and stormwater discharge-related activities that are not protective of legally protected listed or proposed threatened or endangered aquatic fauna or flora (or species proposed for such protection) in the receiving stream(s); or discharges or activities that would result in a "take" of a state or federal listed endangered or threatened aquatic or wildlife species deemed in need of management or special concern species, or such species' habitat. If the department finds that stormwater discharges or stormwater related activities are likely to result in any of the above effects, the director will deny the coverage under this general permit unless and until project plans are changed to adequately protect the species.

i) Discharges from a New or Proposed Mining Operation - This policy does not cover discharges from a new or proposed mining operation.

j) Discharges Negatively Affecting a Property on the National Historic Register - Stormwater discharges that would negatively affect a property that is listed or is eligible for listing in the National Historic Register maintained by the Secretary of Interior.

k) Discharging into Receiving Waters With an Approved Total Maximum Daily Load Analysis - Discharges of pollutants of concern to waters for which there is an Environmental Protection Agency (EPA)-approved total maximum daily load (TMDL) for the same pollutant are not covered by this policy unless measures or controls that are consistent with the assumptions and requirements of such TMDL are incorporated into the SWPPP. If a specific wasteload allocation has been established that would apply to the discharge, that allocation must be incorporated into the SWPPP and steps necessary to meet that allocation must be implemented. In a situation where an EPA-approved or established TMDL has specified a general wasteload allocation applicable to construction stormwater discharges, but no specific requirements for construction sites have been identified, the permittee should consult with the department to confirm that adherence to a SWPPP that meets the requirements of this policy will be consistent with the approved TMDL. Where an EPA-approved or established TMDL has not specified a wasteload allocation applicable to construction stormwater discharges, but has not specifically excluded these discharges, adherence to a SWPPP that meets the requirements of the Construction General Permit (CGP) will generally

be assumed to be consistent with the approved TMDL. If the EPA-approved or established TMDL specifically precludes construction stormwater discharges, the operator is not eligible for coverage under the CGP.

1.4 OBTAINING POLICY COVERAGE

Submitting a complete NOI, a SWPPP and an appropriate permitting application fee are required to obtain coverage under this general permit. Requesting coverage under this policy means that an applicant has obtained and examined a copy of this policy, and thereby acknowledges applicant's claim of ability to comply with the policy terms and conditions. Upon completing NOI review, the department will:

a) issue a notice of coverage (NOC) to the operator identified as a primary permittee on the NOI form (see subpart 1.5 below - *Effective Date of Coverage*); or
b) notify the applicant of needed changes to their NOI submittal (see section 2.6.3 below (*NOI Form - Application completeness*); or
c) deny coverage under this general permit.

1.4.1 Notice of Intent (NOI)

Operators wishing to obtain coverage under this policy must submit a completed NOI in accordance with requirements of part 2 below (*Notice of Intent (NOI) Requirements*), using the NOI form provided in Appendix A of this policy (or a copy thereof). The department will review NOIs for completeness and accuracy and, when deemed necessary, investigate the proposed project for potential impacts to the waters of the state.

1.4.2 Stormwater Pollution Prevention Plan (SWPPP)

Operators wishing to obtain coverage under this policy must develop and submit a site-specific SWPPP with the NOI. The initial, comprehensive SWPPP, developed and submitted by the site-wide permittee (typically the owner/developer who applied for coverage at the project commencement), should address all construction-related activities from the date construction commences to the date of termination of permit coverage, to the maximum extent practicable. The SWPPP must be developed, implemented and updated according to the requirements in part 3 below (*SWPPP Requirements*) and subpart 2.3 below (*Responsibilities of Operators*). The SWPPP must be implemented prior to commencement of construction activities.

If the initial, comprehensive SWPPP does not address all activities until final stabilization of the site, an updated SWPPP or addendums to the plan addressing all aspects of current site disturbance must be prepared. An active, updated SWPPP must be in place for all disturbed portions of a site until each portion has been completed and finally stabilized.

Preparation and implementation of the comprehensive SWPPP may be a cooperative effort with all operators at a site. New operators with design and operational control of their portion of the construction site are expected to adopt, modify, update and implement a comprehensive SWPPP. Primary permittees at the site may develop a SWPPP addressing only their portion of the project, as long as the proposed Best Management Practices (BMPs) are compatible with the comprehensive SWPPP and complying with conditions of this general permit.

1.4.3 Permit application fees

The permit application fee should accompany the site-wide permittee's NOI form. The fee is based on the total acreage planned to be disturbed by an entire construction project for which the site-wide permittee is requesting coverage, including any associated construction support activities (see section 1.2.2 above (*Stormwater discharges associated with construction support activities*)). *The disturbed area* means the total area presented as part of the development (and/or of a larger common plan of development) subject to being cleared, graded, or excavated during the life of the development. The area cannot be limited to only

the portion of the total area that the site-wide owner/developer initially disturbs through the process of various land clearing activities and/or in the construction of roadways, sewers and water utilities, stormwater drainage structures, etc., to make the property marketable. The site-wide owner/developer may present documentation of common areas in the project that will not be subject to disturbance at anytime during the life of the project and have these areas excluded from the fee calculation.

The application fees shall be as specified in the Stormwater and Street Ordinance. The application will be deemed incomplete until the appropriate application fee is paid in full. Checks for the appropriate fee should be made payable to "City of Knoxville." There is no additional fee for subsequent owner/operator to obtain permit coverage (see section 2.4.3 below (*New operator)*), as long as the site-wide primary permittee has active permit coverage at the time of receipt of the subsequent operator's application, because the site-wide primary permittee paid the appropriate fee for the entire area of site disturbance. If a project was previously permitted, but permit coverage was terminated (see section 8.1.1 below (*Termination process for primary permittees*)), and subsequent site disturbance or re-development occurs, the new operator must obtain coverage and pay the appropriate fee for the disturbed acreage.

1.5 EFFECTIVE DATE OF COVERAGE

1.5.1 Notice of Coverage (NOC)

The NOC is a notice from the department to the primary permittee, which informs the primary permittee that the NOI, the SWPPP and the appropriate fee were received and accepted, and stormwater discharges from a specified area of a construction activity have been approved under this general permit. The permittee is authorized to discharge stormwater associated with construction activity as of the effective date listed on the NOC.

Assigning a permit tracking number by the department to a proposed discharge from a construction site does not confirm or imply an authorization to discharge under this permit.

Correspondence with the permittee is maintained through the Site Owner or Developer listed in the NOI: not the optional contact or the secondary permittee.

If any Aquatic Resource Alteration Permits (ARAP) are required for a site in areas proposed for active construction, the NOC will not be issued until ARAP application(s) are submitted and deemed by the City of Knoxville to be complete. The treatment and disposal of wastewater (including, but not limited to sanitary wastewater) generated during and after the construction must be also addressed. The issuance of the NOC may be delayed until adequate wastewater treatment and accompanying permits are issued.

1.5.2 Permit tracking numbers

Construction sites covered under this permit will be assigned permit tracking numbers in the sequence TNQ030001, TNQ030002, etc. An operator presently permitted under a previous construction general permit shall be granted coverage under this new general permit. Permit tracking numbers assigned under a previous construction general permit will be retained (see section 2.4.1 below (*Existing site*)). An operator receiving new permit coverage will be assigned a new permit tracking number (see section 2.4.2 below (Application for new permit coverage)).

SECTION 2 NOTICE OF INTENT (NOI) REQUIREMENTS

2.1 WHO MUST SUBMIT AN NOI?

All site operators must submit an NOI form. "Operator" for the purpose of this policy and in the context of stormwater associated with construction activity means any person associated with a construction project who meets either or both of the following two criteria:

a) The person has operational or design control over construction plans and specifications, including the ability to make modifications to those plans and specifications. This person is typically the owner or developer of the project or a portion of the project (e.g. subsequent builder), or the person that is the current land owner of the construction site. This person is considered the primary permittee; or
b) The person has day-to-day operational control of those activities at a project which are necessary to ensure compliance with a SWPPP for the site or other permit conditions. This person is typically a contractor or a commercial builder who is hired by the primary permittee, and is considered a secondary permittee.

The site-wide permittee is the first primary permittee to apply for coverage at the site. There may be other primary permittees for a project, but there is only one site-wide permittee. Where there are multiple operators associated with the same project, all operators are required to obtain permit coverage. Once covered by a permit, all such operators are to be considered as co-permittees if their involvement in the construction activities affects the same project site, and are held jointly and severally responsible for complying with the permit.

2.2 TYPICAL CONSTRUCTION SITE OPERATORS

2.2.1 Owner/Developer

An owner or developer(s) of a project is a primary permittee. This person has operational or design control over construction plans and specifications, including the ability to make modifications to those plans and specifications. This person may include, but is not limited to a developer, landowner, realtor, commercial builder, homebuilder, etc. An owner or developer's responsibility to comply with requirements of this policy extends until permit coverage is terminated in accordance with requirements of part 8 below (*Requirements for Termination of Coverage*).

2.2.2 Commercial builders

A commercial builder can be a primary or secondary permittee at a construction site.

A commercial builder who purchases one or more lots from an owner/developer (site-wide permittee) for the purpose of constructing and selling a structure (e.g., residential house, non-residential structure, commercial building, industrial facility, etc.) and has design or operational control over construction plans and specifications is a primary permittee for that portion of the site. A commercial builder may also be hired by the end user (e.g., a lot owner who may not be a permittee). In either case the commercial builder is considered a new operator and must submit a new NOI following requirements in section 2.4.3 below (*New operator*).

The commercial builder may also be hired by the primary permittee or a lot owner to build a structure. In this case, the commercial builder signs the primary permittee's NOI and SWPPP as a contractor (see section 2.2.3 below (*Contractors*)) and is considered a secondary permittee.

2.2.3 Contractors

A contractor is considered a secondary permittee. This person has day-to-day operational control of those activities at a project which are necessary to ensure compliance with a SWPPP for the site or other permit conditions (e.g., contractor is authorized to direct workers at a site to carry out activities required by the SWPPP or comply with other permit conditions).

A contractor may be, but is not limited to, a general contractor, grading contractor, erosion control contractor, sub-contractor responsible for any land disturbing activities and/or erosion prevention and sediment control (EPSC) implementation/maintenance, commercial builder hired by the owner/developer, etc. The contractor may need to include in their contract with the party that hired them specific details for the contractor's responsibilities concerning EPSC measures. This includes the ability of the contractor to make EPSC modifications. The contractor should sign the NOI and SWPPP associated with the construction project at which they will be an operator.

2.3 RESPONSIBILITIES OF OPERATORS

A permittee may meet one or more of the operational control components in the definition of "operator" found in subpart 2.1 above (*Who mist submit an NOI?*). Either section 2.3.1 or 2.3.2 below (*Permittee(s) with design control (owner/developer)* or *Permittee(s) with day-to-day operational control (contractor – secondary permittee)*, respectively), or both, will apply depending on the type of operational control exerted by an individual permittee.

2.3.1 Permittee(s) with design control (owner/developer)

Permittee(s) with design control (i.e., operational control over construction plans and specifications) at the construction site, including the ability to make modifications to those plans and specifications (e.g., owner/developer) must:

a) Ensure the project specifications they develop meet the minimum requirements of part 3 below (*Stormwater Pollution Prevention Plan (SWPPP) Requirements*) and all other applicable conditions;
b) Ensure that the SWPPP indicates the areas of the project where they have design control (including the ability to make modifications in specifications), and ensure all other permittees implementing and maintaining portions of the SWPPP impacted by any changes they make to the plan are notified of such modifications in a timely manner;
c) Ensure that all common facilities (i.e., sediment treatment basin and drainage structures) that are necessary for the prevention of erosion and control of sediment are maintained and effective until all construction is complete and all disturbed areas in the entire project are stabilized, unless permit coverage has been obtained and responsibility has been taken over by a new (replacement) owner/operator.
d) If parties with day-to-day operational control of the construction site have not been identified at the time the comprehensive SWPPP is initially developed, the permittee with design control shall be considered to be the responsible person until such time the supplemental NOI is submitted, identifying the new operator(s) (see section 2.4.3 below (*New operator*)). These new operators (e.g., general contractor, utilities contractors, sub-contractors, erosion control contractors, hired commercial builders) are considered secondary permittees. The SWPPP must be updated to reflect the addition of new operators as needed to reflect operational or design control.
e) Ensure that all operators on the site have permit coverage, if required, and are complying with the SWPPP.

2.3.2 Permittee(s) with day-to-day operational control (contractor – secondary permittee)

Permittee(s) with day-to-day operational control of those activities at a project which are necessary to ensure compliance with the SWPPP for the site or other permit conditions (e.g., general contractor, utilities contractors, sub-contractors, erosion control contractors, hired commercial builders) must:

a) Ensure that the SWPPP for portions of the project where they are operators meets the minimum requirements of part 3 below (*SWPPP Requirements*) and identifies the parties responsible for implementation of control measures identified in the plan;
b) Ensure that the SWPPP indicates areas of the project where they have operational control over day-to-day activities;
c) Ensure that measures in the SWPPP are adequate to prevent erosion and control any sediment that may result from their earth disturbing activity;
d) Permittees with operational control over only a portion of a larger construction project are responsible for compliance with all applicable terms and conditions of this policy as it relates to their activities on their portion of the construction site. This includes, but is not limited to, implementation of Best Management Practices (BMPs) and other controls required by the SWPPP. Permittees shall ensure either directly or through coordination with other permittees, that their activities do not render another person's pollution control ineffective. All permittees must implement their portions of a comprehensive SWPPP.

2.4 NOI SUBMITTAL

2.4.1 Existing site

An operator presently permitted under the 2005 construction general permit shall be granted coverage under this new general permit. There will be no additional fees associated with an extension of coverage for existing sites under the new permit. The department may, at its discretion, require permittees to confirm their intent to be covered under this new general permit following its effective date through submission of an updated NOI. Should the confirmation be required and is not received, coverage under the new general permit will be terminated. Should a site with terminated coverage be unstable or construction continues, a new NOI, SWPPP and an appropriate fee must be submitted.

2.4.2 Application for new permit coverage

Except as provided in section 2.4.3 below (*New operator*), operators must submit a complete NOI, SWPPP and an appropriate fee in accordance with the requirements described in subpart 1.4 above (*Obtaining Policy Coverage*). The complete application should be submitted at least 30 days prior to commencement of construction activities. The permittee is authorized to discharge stormwater associated with construction activity as of the effective date listed on the NOC. The land disturbing activities shall not start until a NOC is prepared and written approval by the department staff is obtained according to subpart 1.5 above (*Effective Date of Coverage*).

2.4.3 New operator

For stormwater discharges from construction sites or portions of the sites where the operator changes (new owner), or projects where an operator is added (new contractor) after the initial NOI and comprehensive SWPPP have been submitted, the supplemental (submitted by a new contractor) or additional (submitted by a new owner) NOI should be submitted as soon as practicable, and always before the new operator commences work at the site. The supplemental NOI must reference the project name and tracking number assigned to the primary permittee's NOI.

If the site under the control of the new owner is inactive and all areas disturbed are completely stabilized, the NOI may not need to be submitted immediately upon assuming operational control. However, the department should be notified if a new operator obtains operational control at a site, but commencement of construction under the direction of the operator at the site is going to be delayed.

If upon the sale or transfer of the site's ownership does not change the signatory requirements for the NOI (see section 7.7.1 below (*Signatory requirement for a Notice of Intent (NOI)*)), but the site's owner or developer's company name has changed, a new, updated NOI should be submitted to the department within 30 days of the name change. If the new operator agrees to comply with an existing comprehensive SWPPP already implemented at the site, a copy of the supplemental or modified SWPPP does not have to be submitted with the NOI. There will be no additional fees associated with the sale or transfer of ownership for existing permitted sites.

If the transfer of ownership is due to foreclosure or a permittee filing for bankruptcy proceedings, the new owner (including but not limited to a lending institution) must obtain permit coverage if the property is inactive, but is not stabilized sufficiently. If the property is sufficiently stabilized, permit coverage may not be necessary unless, and until, construction activity at the site resumes.

2.4.4 Late NOIs

Dischargers are not prohibited from submitting late NOIs. When a late NOI is submitted, and if the department authorizes coverage under this permit, such authorization is only for future discharges; any prior, unpermitted, discharges or policy noncompliances are subject to penalties as described in section 7.1.2 below (*Penalties for violations of permit conditions*).

2.5 WHO MUST SIGN THE NOI?

All construction site operators as defined in subpart 2.2 above (*Typical Construction Site Operators*) must sign the NOI form. Signatory requirements for a NOI are described in section 7.7.1 below (*Signatory requirement for a Notice of Intent (NOI)*). All signatures must be original. An NOI that does not bear an original signature will be deemed incomplete. The department recommends that signatures be in blue ink.

2.6 NOI FORM

2.6.1 Contents of the NOI form

NOI for construction projects shall be submitted on the form provided in Appendix A of this policy, or on a copy thereof. This form and its instructions set forth the required content of the NOI. The NOI form must be filled in completely. If sections of the NOI are left blank, a narrative explaining the omission must be provided as an attachment.

Owners, developers and all contractors that meet the definition of the operator in subsection 2.2 above (*Typical Construction Site Operators*) shall apply for permit coverage on the same NOI, insofar as possible. The NOI is designed for more than one contractor (secondary permittee). The department may accept separate NOI forms from different operators for the same construction site when warranted.

After permit coverage has been granted to the primary permittee, any subsequent NOI submittals must include the site's previously assigned permit tracking number and the project name. The comprehensive site-specific SWPPP shall be prepared in accordance with the requirements of part 3 below (*SWPPP Requirements*), and must be submitted with the NOI unless the NOI being submitted is to only add a contractor (secondary permittee) to an existing coverage.

2.6.2 Construction site map

An excerpt (8 ½" by 11" or 11" by 17") from the appropriate 7.5 minute United States Geological Survey (USGS) topographic map, with the proposed construction site centered, must be included with the NOI. The entire proposed construction area must be clearly identified (outlined) on this map. The total area to be disturbed (in acres) should be included on the map. The map should outline the boundaries of projects, developments and the construction site in relation to major roads, streams or other landmarks. All outfalls where runoff will leave the property should be identified. Stream(s) receiving the discharge, and storm sewer system(s) conveying the discharge from all site outfalls should be clearly identified and marked on

the map. The map should also list and indicate the location of EPSCs that will be used at the construction site. NOIs for linear projects must specify the location of each end of the construction area and all areas to be disturbed. Commercial builders that develop separate SWPPPs that cover only their portion of the project shall also submit a site or plat map that clearly indicates the lots which they purchased and for which they are applying for permit coverage and the location of EPSCs that will be used at each lot.

2.6.3 Application completeness

Based on a review of the NOI or other available information, the department shall:

1. prepare a notice of coverage (NOC) for the construction site (see subpart 1.5 above (*Effective Date of Coverage*)); or
2. prepare a deficiency letter stating additional information must be provided before the NOC can be issued; or
3. deny coverage under this general permit.

2.7 WHERE TO SUBMIT THE NOI, SWPPP AND PERMITTING FEE?

The applicant shall submit the NOI, SWPPP and permitting fee to the City of Knoxville Engineering Department. The TDEC's Nashville Central Office will serve as a processing office for NOIs submitted by federal or state agencies (including, but not limited to the Tennessee Department of Transportation (TDOT), Tennessee Valley Authority (TVA) and the local Municipal Separate Storm Sewer System (MS4) programs).

The City of Knoxville Engineering Department may be reached by telephone at (865) 215-2148.

SECTION 3 STORMWATER POLLUTION PREVENTION PLAN (SWPPP) REQUIREMENTS

3.1. THE GENERAL PURPOSE OF THE SWPPP

A comprehensive SWPPP must be prepared and submitted along with the NOI as required in section 1.4.2 above (*SWPPP*). The primary permittee must implement the SWPPP as written from commencement of construction activity until final stabilization is complete or until the permittee does not have design or operational control of any portion of the construction site. Requirements for termination of site coverage are provided in part 8 below (*Requirements for Termination of Coverage*).

A site-specific SWPPP must be developed for each construction project or site covered by this permit. The design, inspection and maintenance of Best Management Practices (BMPs) described in the SWPPP must be prepared in accordance with good engineering practices. At a minimum, BMPs shall be consistent with the requirements and recommendations contained in the current edition of the Tennessee Erosion and Sediment Control Handbook (handbook). The handbook is designed to provide information to planners, developers, engineers, and contractors on the proper selection, installation, and maintenance of BMPs. This policy allows the use of innovative or alternative BMPs, whose performance has been documented to be equivalent or superior to conventional BMPs as certified by the SWPPP designer.

Once a definable area has been finally stabilized, the permittee may identify this area on the site-specific SWPPP. No further SWPPP or inspection requirements apply to that portion of the site (e.g., earth-disturbing activities around one of three buildings in a complex are done and the area is finally stabilized, one mile of a roadway or pipeline project is done and finally stabilized, etc).

For more effective coordination of BMPs, a cooperative effort by the different operators at a site to prepare and participate in a comprehensive SWPPP is expected. Primary permittees at a site may develop separate SWPPPs that cover only their portion of the project. In instances where there is more than one SWPPP for a site, the permittees must ensure the stormwater discharge controls and other measures are compatible with

one another and do not prevent another operator from complying with permit conditions. The comprehensive SWPPP developed and submitted by the primary permittee must assign responsibilities to subsequent (secondary) permittees and coordinate all BMPs at the construction site. Assignment and coordination can be done by name or by job title.

3.1.1 Registered engineer or landscape architect requirement

The narrative portion of the SWPPP may be prepared by an individual that has a working knowledge of erosion prevention and sediment controls, such as a Certified Professional in Erosion and Sediment Control (CPESC) or a person that successfully completed the "Level II Design Principles for Erosion Prevention and Sediment Control for Construction Sites" course. Plans and specifications for any building or structure, including the design of sediment basins or other sediment controls involving structural, hydraulic, hydrologic or other engineering calculations shall be prepared by a licensed professional engineer or landscape architect and stamped and certified in accordance with the Tennessee Code Annotated, Title 62, Chapter 2 (see part 10 below (*Definitions*)) and the rules of the Tennessee Board of Architectural and Engineering Examiners. Engineering design of sediment basins must be included in SWPPPs for construction sites involving drainage to an outfall totaling 5 or more acres.

3.1.2 Site Assessment

Quality assurance of erosion prevention and sediment controls shall be done by performing site assessment at a construction site. The site assessment shall be conducted at each outfall involving drainage totaling 5 or more acres within a month of construction commencing at each portion of the site that drains the qualifying acreage of such portion of the site. The site assessment shall be performed by individuals with following qualifications:

- A licensed professional engineer or landscape architect;
- A Certified Professional in Erosion and Sediment Control (CPESC); or
- A person that successfully completed the "Level II Design Principles for Erosion Prevention and Sediment Control for Construction Sites" course.

As a minimum, site assessment should be performed to verify the installation, functionality and performance of the EPSC measures described in the SWPPP. The site assessment should be performed with the inspector (as defined in part 10 below (*Definitions)*), and should include a review and update (if applicable) of the SWPPP. Modifications of plans and specifications for any building or structure, including the design of sediment basins or other sediment controls involving structural, hydraulic, hydrologic or other engineering calculations shall be prepared by a licensed professional engineer or landscape architect and stamped and certified in accordance with the Tennessee Code Annotated, Title 62, Chapter 2 (see part 10 below (*Definitions)*) and the rules of the Tennessee Board of Architectural and Engineering Examiners.

The site assessment findings shall be documented and the documentation kept with the SWPPP at the site. At a minimum, the documentation shall include information included in the inspection form provided in Appendix C (*Inspection Report Form*) of this permit. The documentation must contain the printed name and signature of the individual performing the site assessment and the following certification:

> *"I certify under penalty of law that this report and all attachments are, to the best of my knowledge and belief, true, accurate, and complete. I am aware that there are significant penalties for submitting false information, including the possibility of fine and imprisonment for knowing violations."*

The site assessment can take the place of one of the twice weekly inspections requirement from subsection 3.5.8.2 below (*Schedule of inspections*).

The department may require additional site assessment(s) to be performed if site inspection by department's personnel reveals site conditions that have the potential of causing pollution to the waters of the state.

3.2 SWPPP PREPARATION AND COMPLIANCE

3.2.1 Existing site

Operator(s) of an existing site presently permitted under the TDEC's previous construction general permit shall maintain full compliance with the current SWPPP. The current SWPPP should be modified, if necessary, to meet requirements of this new general permit, and the SWPPP changes implemented no later than 12 months following the new permit effective date (May 24, 2011), excluding the buffer zone requirements as stated in section 4.1.2 below (*Buffer zone requirements*). The permittee shall make the updated SWPPP available for the department's review upon request.

3.2.2 New site

For construction stormwater discharges not authorized under an NPDES permit as of the effective date of this permit, a SWPPP that meets the requirements of subpart 3.5 below (*Components of the SWPPP*) of this policy shall be prepared and submitted along with the NOI and an appropriate fee for coverage under this permit.

3.3 SIGNATURE REQUIREMENTS, PLAN REVIEW AND MAKING PLANS AVAILABLE

3.3.1 Signature Requirements for a SWPPP

The SWPPP shall be signed by the operator(s) in accordance with subpart 7.7 below (*Signatory Requirements*), and if applicable, certified according to requirements in section 3.1.1 above (*Registered engineer or landscape architect requirement*). All signatures must be original. A SWPPP that does not bear an original signature will be deemed incomplete. The department recommends that signatures be in blue ink.

3.3.2 SWPPP Review

The permittee shall make updated plans and inspection reports available upon request to the director, local agency approving erosion prevention and sediment control plan, grading plans, land disturbance plans, or stormwater management plans, or the operator of an MS4.

3.3.3 Making plans available

A copy of the SWPPP shall be retained on-site at the location which generates the stormwater discharge in accordance with part 6 below (*Retention, Accessibility and Submission of Records*) of this policy. If the site is inactive or does not have an onsite location adequate to store the SWPPP, the location of the SWPPP, along with a contact phone number, shall be posted on-site. If the SWPPP is located offsite, reasonable local access to the plan, during normal working hours, must be provided.

3.4 KEEPING PLANS CURRENT

3.4.1 SWPPP modifications

The permittee must modify and update the SWPPP if any of the following are met:

a) Whenever there is a change in the scope of the project, which would be expected to have a significant effect on the discharge of pollutants to the waters of the state and which has not otherwise been addressed in the SWPPP. If applicable, the SWPPP must be modified or updated whenever there is a change in chemical treatment methods, including the use of different treatment chemical, different dosage or application rate, or different area of application;
b) Whenever inspections or investigations by site operators, local, state or federal officials indicate the SWPPP is proving ineffective in eliminating or significantly minimizing pollutants from sources identified under section 3.5.2 below (*Description of stormwater runoff controls*), or is otherwise not achieving the general objectives of controlling pollutants in stormwater discharges associated with construction activity. Where local, state or federal officials determine that the

SWPPP is ineffective in eliminating or significantly minimizing pollutant sources, a copy of any correspondence to that effect must be retained in the SWPPP;

c) To identify any new operator (typically contractor and/or subcontractor) as needed to reflect operational or design control that will implement a measure of the SWPPP (see subparts 2.1 and 2.2 above (*Who Must Submit an NOI?* and *Typical Construction Site Operators*, respectively) for further description of which operators must be identified);
d) To include measures necessary to prevent a negative impact to legally protected state or federally listed fauna or flora (or species proposed for such protection – see subpart 1.3 above (*Limitations on Coverage*)). Amendments to the SWPPP may be reviewed by the department, a local MS4, the EPA or an authorized regulatory agency; and
e) A TMDL is developed for the receiving waters for a pollutant of concern (siltation and/or habitat alteration).

3.5 COMPONENTS OF THE SWPPP

The SWPPP shall include the following items, as described in sections 3.5.1 to 3.5.10 below (*Site description* and *Documentation of permit eligibility related to TMDLs*): site description, description of stormwater runoff controls, erosion prevention and sediment controls, stormwater management, description of other items needing control, approved local government sediment and erosion control requirements, maintenance, inspections, pollution prevention measures for non-stormwater discharges, and documentation of permit eligibility related to Total Maximum Daily Loads (TMDL). The SWPPP must:

a) identify all potential sources of pollution which are likely to affect the quality of stormwater discharges from the construction site;
b) describe practices to be used to reduce pollutants in stormwater discharges from the construction site; and
c) assure compliance with the terms and conditions of this permit.

3.5.1 Site description

Each plan shall provide a description of pollutant sources and other information as indicated below:

a) A description of all construction activities at the site (not just grading and street construction);
b) The intended sequence of major activities which disturb soils for major portions of the site (e.g., grubbing, excavation, grading, utilities and infrastructure installation, etc.);
c) Estimates of the total area of the site and the total area that is expected to be disturbed by excavation, grading, filling, or other construction activities;
d) A description of the topography of the site including an estimation of the percent slope and the variation in percent slope found on the site; such estimation should be on a basis of a drainage area serving each outfall, rather than an entire project;
e) Any data describing the soil (data may be referenced or summarized) and how the soil type will dictate the needed control measures and how the soil may affect the expected quality of runoff from the site;
f) An estimate of the runoff coefficient of the site after construction activities are completed and how the runoff will be handled to prevent erosion at the permanent outfall and receiving stream, as well as the estimate of the percentage of impervious area before and after construction;
g) An erosion prevention and sediment control plan of the site with the proposed construction area clearly outlined. The plan should indicate the boundaries of the permitted area, drainage patterns and approximate slopes anticipated after major grading activities, areas of soil disturbance, an outline of areas which are not to be disturbed, the location of major structural and nonstructural controls identified in the SWPPP, the location of areas where stabilization practices are expected to occur, surface waters including wetlands, sinkholes, and careful identification on the site plan of outfall points intended for coverage under the general permit for stormwater discharges from the

site. The erosion control plan must meet requirements stated in section 3.5.2 below (*Description of stormwater runoff controls*);

h) A description of any discharge associated with industrial activity other than construction stormwater that originates on site and the location of that activity and its permit number;
i) Identification of any stream or wetland on or adjacent to the project, a description of any anticipated alteration of these waters and the permit number or the tracking number of the Aquatic Resources Alteration Permit (ARAP) or Section 401 Certification issued for the alteration;
j) The name of the receiving water(s), and the approximate size and location of affected wetland acreage at the site;
k) If applicable, clearly identify and outline the buffer zones established to protect waters of the state located within the boundaries of the project;
l) Some construction projects, such as residential or commercial subdivisions and/or developments or industrial parks are subdivided. Subdivided lots are sometimes sold to new owners prior to completion of construction. The site-wide developer/owner must describe EPSC measures implemented at those lots. Once the property is sold, the new operator must obtain coverage under this permit;
m) For projects of more than 50 acres, the construction phases must be described (see subsection 3.5.3.1 below (*General criteria and requirements*)); and
n) If only a portion of the total acreage of the construction site is to be disturbed, then the protections employed to limit the disturbance must be discussed, i.e., caution fence, stream side buffer zones, etc. Limits of disturbance shall be clearly marked in the SWPPP and areas to be undisturbed clearly marked in the field before construction activities begin.

3.5.2 Description of stormwater runoff controls

The SWPPP shall include a description of appropriate erosion prevention and sediment controls and other Best Management Practices (BMPs) that will be implemented at the construction site. The SWPPP must clearly describe each major activity which disturbs soils for major portions of the site (e.g., grubbing, excavation, grading, utilities and infrastructure installation, etc.):

a) Appropriate control measures and the general timing for the measures to be implemented during construction activities; and
b) Which permittee is responsible for implementation of which controls.

The SWPPP must include erosion prevention and sediment control (EPSC) plans showing the approximate location of each control measure along with a description of the timing during the construction process for implementing each measure (e.g., prior to the start of earth disturbance, as the slopes are altered and after major grading is finished). The different stages of construction (initial/major grading, installation of infrastructure, final contours, etc.) and the erosion preventions and sediment control measures that will be utilized during each stage should be depicted on multiple plan sheets (see paragraphs below). Half sheets are acceptable. One sheet showing all EPSCs that will be used during the life of the multi-phase project implementing different EPSC controls at each stage will not be considered complete.

For site disturbances less than 5 acres, at least two separate EPSC plan sheets shall be developed. At least two stages shall be identified, with associated EPSC measures addressed. The plan stages shall be addressed separately in plan sheets, with each stage reflecting the conditions and EPSC measures necessary to manage stormwater runoff, erosion and sediment during the initial land disturbance (initial grading) and the conditions and EPSC measures necessary to manage stormwater runoff, erosion and sediment at final grading.

For site disturbances more than 5 acres, at least 3 separate EPSC plan sheets shall be developed. Three stages shall be identified. The first plan sheet should reflect the conditions and EPSC measures necessary to manage stormwater runoff, during the initial land disturbance (initial grading). The second plan sheet shall reflect the conditions and the EPSC measures necessary to manage stormwater runoff from interim

land disturbance activities. The third plan sheet shall reflect the conditions and EPSC measures necessary to manage stormwater runoff, erosion and sediment at final grading.

The description and implementation of controls shall address the following minimum components, as described in sections 3.5.3, 3.5.4 and 3.5.5 below (*Erosion prevention and sediment controls, Stormwater management,* and *Other items needing control*). Additional controls may be necessary to comply with section 5.3.2 below (*Discharge quality*).

3.5.3 Erosion prevention and sediment controls

3.5.3.1 General criteria and requirements

a) The construction-phase erosion prevention controls shall be designed to eliminate (or minimize if complete elimination is not possible) the dislodging and suspension of soil in water. Sediment controls shall be designed to retain mobilized sediment on site to the maximum extent practicable.
b) The design, inspection and maintenance of Best Management Practices (BMPs) and, at a minimum, shall be consistent with the requirements and recommendations contained in the current edition of the Tennessee Erosion and Sediment Control Handbook. In addition, all control measures must be properly selected, installed, and maintained in accordance with the manufacturer's specifications (where applicable). All control measures selected must be able to slow runoff so that rill and gully formation is prevented. When steep slopes and/or fine particle soils are present at the site, additional physical or chemical treatment of stormwater runoff may be required. Proposed physical and/or chemical treatment must be researched and applied according to the manufacturer's guidelines and fully described in the SWPPP. If periodic inspections or other information indicates a control has been used inappropriately, or incorrectly, the permittee must replace or modify the control for relevant site situations.
c) If permanent or temporary vegetation is to be used as a control measure, then the timing of the planting of the vegetation cover must be discussed in the SWPPP. Planning for planting cover vegetation during winter months or dry months should be avoided.
d) If sediment escapes the permitted area, off-site accumulations of sediment that have not reached a stream must be removed at a frequency sufficient to minimize offsite impacts (e.g., fugitive sediment that has escaped the construction site and has collected in a street must be removed so that it is not subsequently washed into storm sewers and streams by the next rain and/or so that it does not pose a safety hazard to users of public streets). Permittees shall not initiate remediation/restoration of a stream without consulting the department first. This policy does not authorize access to private property. Arrangements concerning removal of sediment on adjoining property must be settled by the permittee with the adjoining landowner.
e) Sediment should be removed from sediment traps, silt fences, sedimentation ponds, and other sediment controls as recommended in the Tennessee Erosion and Sediment Control Handbook, and must be removed when design capacity has been reduced by 50%.
f) Litter, construction debris, and construction chemicals exposed to stormwater shall be picked up prior to anticipated storm events or before being carried off of the site by wind (e.g., forecasted by local weather reports), or otherwise prevented from becoming a pollutant source for stormwater discharges (e.g., screening outfalls, daily pick-up, etc.). After use, materials used for erosion prevention and sediment control (such as silt fence) should be removed or otherwise prevented from becoming a pollutant source for stormwater discharges.
g) Erodible material storage areas (including but not limited to overburden and stockpiles of soil etc.) and borrow pits used primarily for the permitted project and which are contiguous to the site are considered a part of the site and shall be identified on the NOI, addressed in the SWPPP and included in the fee calculation. TDOT projects shall be addressed in the Waste and Borrow Manual per the Statewide Stormwater Management Plan (SSWMP).

h) Pre-construction vegetative ground cover shall not be destroyed, removed or disturbed more than 15 days prior to grading or earth moving unless the area is seeded and/or mulched or other temporary cover is installed.
i) Clearing and grubbing must be held to the minimum necessary for grading and equipment operation. Existing vegetation at the site should be preserved to the maximum extent practicable.
j) Construction must be sequenced to minimize the exposure time of graded or denuded areas.
k) Construction phasing is required on all projects regardless of size as a major phased to keep the total disturbed area less than 50 acres at any one time. Areas of the completed phase must be stabilized within 14 days (see subsection 3.5.3.2 below (*Stabilization practices*)). No more than 50 acres of active soil disturbance is allowed at any time during the construction project. This includes off-site borrow or disposal areas that meet the conditions of section 1.2.2 above (*Stormwater discharges associated with construction support activities*) of this general permit.

The 50 acre limitation does not apply to linear construction projects (such as roadway, pipeline, and other infrastructure construction activities) if the following conditions are met:

- Where no one area of active soil disturbance is greater than 50 acres and the various areas of disturbance have distinct receiving waters; or
- Where contiguous disturbances amount to greater than 50 acres, but no one distinct water is receiving run off from more than 50 disturbed acres; or
- With the department's written concurrence, where more than 50 acres of disturbance is to occur and where one receiving water will receive run-off from more than 50 acres; or
- Where no one area of active soil disturbance is greater than 50 acres and the various areas of disturbance are more than 5 miles apart.

In order for a linear project to take advantage of the 50 acre rule exemption outlined in this paragraph, the contractor shall conduct monthly site assessments as described in section 3.1.2 above (*Site Assessment*) until the site is permanently stabilized.

l) Erosion prevention and sediment control measures must be in place and functional before earth moving operations begin, and must be constructed and maintained throughout the construction period. Temporary measures may be removed at the beginning of the workday, but must be replaced at the end of the workday.
m) The following records shall be maintained on or near site: the dates when major grading activities occur; the dates when construction activities temporarily or permanently cease on a portion of the site; the dates when stabilization measures are initiated; inspection records and rainfall records.
n) Off-site vehicle tracking of sediments and the generation of dust shall be minimized. A stabilized construction access (a point of entrance/exit to a construction site) shall be described and implemented, as needed, to reduce the tracking of mud and dirt onto public roads by construction vehicles.
o) Permittees shall maintain a rain gauge and daily rainfall records at the site, or use a reference site for a record of daily amount of precipitation.

3.5.3.2 Stabilization practices

The SWPPP shall include a description of interim and permanent stabilization practices, including site-specific scheduling of the implementation of the practices. Site plans should ensure that existing vegetation is preserved where attainable and that disturbed portions of the site are stabilized. Site plans should comply with buffer zone requirements (see sections 4.1.2 and 5.4.2 below (*Buffer zone requirements* and *Buffer zone requirements for discharges into impaired or exceptional TN waters*, respectively)), if applicable, in which construction activities, borrow and/or fill are prohibited. Stabilization practices may include: temporary seeding, permanent

seeding, mulching, geotextiles, sod stabilization, vegetative buffer strips, protection of trees, preservation of mature vegetation, and other appropriate measures. Use of impervious surfaces for final stabilization in lieu of a permanent vegetative cover should be avoided where practicable. No stabilization, erosion prevention and sediment control measures are to be installed in a stream without obtaining a Section 404 permit and an Aquatic Resources Alteration Permit (ARAP), if such permits are required and appropriate. Stabilization measures shall be initiated as soon as possible in portions of the site where construction activities have temporarily or permanently ceased. Temporary or permanent soil stabilization at the construction site (or a phase of the project) must be completed no later than 14 days after the construction activity in that portion of the site has temporarily or permanently ceased. In the following situations, temporary stabilization measures are not required:

a) where the initiation of stabilization measures is precluded by snow cover or frozen ground conditions or adverse soggy ground conditions, stabilization measures shall be initiated as soon as practicable; or
b) where construction activity on a portion of the site is temporarily ceased, and earth disturbing activities will be resumed within 14 days.

Steep slopes shall be temporarily stabilized not later than 7 days after construction activity on the slope has temporarily or permanently ceased.

Permanent stabilization with perennial vegetation (using native herbaceous and woody plants where practicable) or other permanently stable, non-eroding surface shall replace any temporary measures as soon as practicable. Unpacked gravel containing fines (silt and clay sized particles) or crusher runs will not be considered a non-eroding surface.

3.5.3.3 Structural practices

The SWPPP shall include a description of structural practices to divert flows from exposed soils, store flows or otherwise limit runoff and discharge of pollutants from exposed areas of the site. Such practices may include silt fences, earth dikes, drainage swales, sediment traps, check dams, subsurface drains, pipe slope drains, level spreaders, storm drain inlet protection, rock outlet protection, reinforced soil retaining systems, gabions, and temporary or permanent sediment basins. Structural controls shall not be placed in streams or wetlands except as authorized by a section 404 permit and/or Aquatic Resources Alteration Permit (ARAP).

Erosion prevention and sediment control measures must be prepared in accordance with good engineering practices and the latest edition of the Tennessee Erosion and Sediment Control Handbook. In addition, erosion prevention and sediment controls shall be designed to minimize erosion and maximize sediment removal resulting from a 2-year, 24-hour storm (the design storm – see part 10 below: "2-year and 5-year design storm depths and intensities"), as a minimum, either from total rainfall in the designated period or the equivalent intensity as specified on the following website http://hdsc.nws.noaa.gov/hdsc/pfds/orb/tn_pfds.html. When clay and other fine particle soils are present at the construction site, chemical treatment may be used to minimize amount of sediment being discharged.

For an on-site outfall which receives drainage from 5 or more acres, a minimum sediment basin volume that will provide treatment for a calculated volume of runoff from a 5 year, 24 hour storm and runoff from each acre drained, or equivalent control measures as specified in the Tennessee Erosion and Sediment Control Handbook, shall be provided until final stabilization of the site. A drainage area of 5 or more acres includes both disturbed and undisturbed portions of the site or areas adjacent to the site, all draining through the common outfall. Where an equivalent control measure is substituted for a sediment retention basin, the equivalency must be justified to the department. Runoff from any undisturbed acreage should be diverted around the disturbed area and

the sediment basin. Diverted runoff can be omitted from the volume calculation. Sediment storage expected from the disturbed areas must be included. All calculations of drainage areas, runoff coefficients and basin volumes must be provided in the SWPPP. The discharge structure from a sediment basin must be designed to retain sediment during the lower flows. Muddy water to be pumped from excavation and work areas must be held in settling basins or filtered or chemically treated prior to its discharge into surface waters. Water must be discharged through a pipe, well-grassed or lined channel or other equivalent means so that the discharge does not cause erosion and sedimentation. Discharged water must not cause an objectionable color contrast with the receiving stream.

3.5.4 Stormwater management

The SWPPP shall include a description of any measures that will be installed during the construction process to control pollutants in stormwater discharges that will occur after construction operations have been completed.

For projects discharging to waters considered impaired by sediment or habitat alteration due to in-channel erosion, the SWPPP shall include a description of measures that will be installed during the construction process to control pollutants and any increase in the volume of stormwater discharges that will occur after construction operations have been completed. For steep slope sites, the SWPPP shall also include a description of measures that will be installed to dissipate the volume and energy of the stormwater runoff to pre-development levels.

This policy only addresses the installation of stormwater management measures, and not the ultimate operation and maintenance of such structures after the construction activities have been completed, the site has undergone final stabilization, and the permit coverage has been terminated. Permittees are only responsible for the installation and maintenance of stormwater management measures prior to final stabilization of the site, and are not responsible for maintenance after stormwater discharges associated with construction activity have been eliminated from the site. All permittees are encouraged to limit the amount of post construction runoff, if not required by local building regulations or local MS4 program requirements, in order to minimize in-stream channel erosion in the receiving stream.

Construction stormwater runoff management practices may include: stormwater detention structures (including ponds with a permanent pool); stormwater retention structures; flow attenuation by use of open vegetated swales and natural depressions; infiltration of runoff onsite; and sequential systems (which combine several practices).

Velocity dissipation devices shall be placed at discharge locations and along the length of any outfall channel to provide a non-erosive velocity flow from the structure to the receiving stream so that the natural physical and biological characteristics and functions of the stream are maintained and protected (e.g., there should be no significant changes in the hydrological regime of the receiving water). The SWPPP shall include an explanation of the technical basis used to select the velocity dissipation devices to control pollution where flows exceed pre-development levels. The Tennessee Erosion and Sediment Control Handbook provides measures that can be incorporated into the design or implemented on site to decrease erosive velocities. An Aquatic Resources Alteration Permit (ARAP) from TDEC may be required if such velocity dissipation devices installed would alter the receiving stream and/or its banks.

3.5.5 Other items needing control

a) No solid materials, including building materials, shall be placed in waters of the state, except as authorized by a section 404 permit and/or Aquatic Resources Alteration Permit (ARAP) (see part 9 below (*Aquatic Resource Alteration Permits (ARAP)*)).
b) For installation of any waste disposal systems on site, or sanitary sewer or septic system, the SWPPP shall identify these systems and provide for the necessary EPSC controls. Permittees must

also comply with applicable state and/or local waste disposal, sanitary sewer or septic system regulations for such systems to the extent these are located within the permitted area.

c) The SWPPP shall include a description of construction and waste materials expected to be stored on-site. The SWPPP shall also include a description of controls used to reduce pollutants from materials stored on site, including storage practices to minimize exposure of the materials to stormwater, and spill prevention and response.
d) A description of stormwater sources from areas other than construction and a description of controls and measures that will be implemented at those sites.
e) A description of measures necessary to prevent "taking" of legally protected state or federal listed threatened or endangered aquatic fauna and/or critical habitat (if applicable). The permittee must describe and implement such measures to maintain eligibility for coverage under this permit.

3.5.6 Approved local government sediment and erosion control requirements

Permittees must comply with any additional erosion prevention, sediment controls and stormwater management measures required by a local municipality or permitted MS4 program.

3.5.7 Maintenance

The SWPPP shall describe procedures to ensure that vegetation, erosion and sediment control measures, buffer zones, and other protective measures identified in the site plan are kept in good and effective operating condition. Maintenance needs identified in inspections or by other means shall be accomplished before the next storm event, but in no case more than 7 days after the need is identified.

3.5.8 Inspections

3.5.8.1 Inspector training and certification

Inspectors performing the required twice weekly inspections must have an active certification by completing the "Fundamentals of Erosion Prevention and Sediment Control Level I" course. A copy of the certification or training record for inspector certification should be kept on site.

3.5.8.2 Schedule of inspections

a) Inspections described in paragraphs b, c and d below shall be performed at least twice every calendar week. Inspections shall be performed at least 72 hours apart. Where sites or portion(s) of construction sites have been temporarily stabilized, or runoff is unlikely due to winter conditions (e.g., site covered with snow or ice) or due to extreme drought, such inspection only has to be conducted once per month until thawing or precipitation results in runoff or construction activity resumes. Inspection requirements do not apply to definable areas that have been finally stabilized, as described in subpart 3.1 above (*The General Purpose of the SWPPP*). Written notification of the intent to change the inspection frequency and the justification for such request must be submitted to the City of Knoxville Engineering Department, or TDEC's Nashville Central Office for projects of the Tennessee Department of Transportation (TDOT) and the Tennessee Valley Authority (TVA). Should the department discover that monthly inspections of the site are not appropriate due to insufficient stabilization measures or otherwise, twice weekly inspections shall resume. The department may inspect the site to confirm or deny the notification to conduct monthly inspections.
b) Qualified personnel, as defined in section 3.5.8.1 above (*Inspector training and certification*) (provided by the permittee or cooperatively by multiple permittees) shall inspect disturbed areas of the construction site that have not been finally stabilized, areas used for storage of materials that are exposed to precipitation, structural control measures, locations where vehicles enter or exit the site, and each outfall.
c) Disturbed areas and areas used for storage of materials that are exposed to precipitation shall be inspected for evidence of, or the potential for, pollutants entering the site's drainage system.

Erosion prevention and sediment control measures shall be observed to ensure that they are operating correctly.

d) Outfall points (where discharges leave the site and/or enter waters of the state) shall be inspected to determine whether erosion prevention and sediment control measures are effective in preventing significant impacts to receiving waters. Where discharge locations are inaccessible, nearby downstream locations shall be inspected. Locations where vehicles enter or exit the site shall be inspected for evidence of offsite sediment tracking.

e) Based on the results of the inspection, any inadequate control measures or control measures in disrepair shall be replaced or modified, or repaired as necessary, before the next rain event, but in no case more than 7 days after the need is identified.

f) Based on the results of the inspection, the site description identified in the SWPPP in accordance with section 3.5.1 above (*Site description*) and pollution prevention measures identified in the SWPPP in accordance with section 3.5.2 above (*Description of stormwater runoff controls*) shall be revised as appropriate, but in no case later than 7 days following the inspection. Such modifications shall provide for timely implementation of any changes to the SWPPP, but in no case later than 14 days following the inspection.

g) All inspections shall be documented on the Construction Stormwater Inspection Certification form provided in Appendix C of this policy for all construction sites. An alternative inspection form may be used as long as the form contents and the inspection certification language are, at a minimum, equivalent to the department's form (Appendix C) and the permittee has obtained a written approval from the department to use the alternative form. Inspection documentation will be maintained on site and made available to the department upon request. Inspection reports must be submitted to the department within 10 days of the request. If the department requests the Construction Stormwater Inspection Certification form to be submitted, the submitted form must contain the printed name and signature of the trained certified inspector and the person who meets the signatory requirements of section 7.7.2 below (*Signatory requirements for reports and other items*) of this permit.

h) Trained certified inspectors shall complete inspection documentation to the best of their ability. Falsifying inspection records or other documentation or failure to complete inspection documentation shall result in a violation of this policy and any other applicable acts or rules.

i) Subsequent operator(s) (primary permittees) who have obtained coverage under this policy should conduct twice weekly inspections, unless their portion(s) of the site has been temporarily stabilized, or runoff is unlikely due to winter conditions or due to extreme drought as stated in paragraph a) above. The primary permittee (such as a developer) is no longer required to conduct inspections of portions of the site that are covered by a subsequent primary permittee (such as a home builder).

3.5.9 Pollution prevention measures for non-stormwater discharges

Sources of non-stormwater listed in section 1.2.3 above (*Non-stormwater discharges authorized by this permit*) of this policy that are combined with stormwater discharges associated with construction activity must be identified in the SWPPP. The plan shall identify and ensure the implementation of appropriate pollution prevention measures for the non-stormwater component(s) of the discharge. Any non-stormwater must be discharged through stable discharge structures. Estimated volume of the non-stormwater component(s) of the discharge must be included in the design of all impacted control measures.

3.5.10 Documentation of permit eligibility related to Total Maximum Daily Loads (TMDL)

The SWPPP must include documentation supporting a determination of permit eligibility with regard to waters that have an approved TMDL for a pollutant of concern, including:

a) identification of whether the discharge is identified, either specifically or generally, in an approved TMDL and any associated wasteload allocations, site-specific requirements, and assumptions identified for the construction stormwater discharge;
b) summaries of consultation with the department on consistency of SWPPP conditions with the approved TMDL, and
c) measures taken to ensure that the discharge of TMDL identified pollutants from the site is consistent with the assumptions and requirements of the approved TMDL, including any specific wasteload allocation that has been established that would apply to the construction stormwater discharge.

SECTION 4 CONSTRUCTION AND DEVELOPMENT EFFLUENT GUIDELINES

4.1 NON-NUMERIC EFFLUENT LIMITATIONS

Any point source authorized by this general permit must achieve, at a minimum, the effluent limitations representing the degree of effluent reduction attainable by application of best practicable control technology (BPT) currently available and is described in sections 4.1.1 through 4.1.7 below.

4.1.1 Erosion Prevention and Sediment Controls

Design, install and maintain effective erosion prevention and sediment controls to minimize the discharge of pollutants. At a minimum, such controls must be designed, installed and maintained to:

(1) control stormwater volume and velocity within the site to minimize soil erosion;

(2) control stormwater discharges, including both peak flow rates and total stormwater volume, to minimize erosion at outlets and to minimize downstream channel and stream bank erosion;

(3) minimize the amount of soil exposed during construction activity;

(4) minimize the disturbance of steep slopes;

(5) eliminate (or minimize if complete elimination is not possible) sediment discharges from the site. The design, installation and maintenance of erosion prevention and sediment controls must address factors such as the design storm (see sub-section 3.5.3.3 above) and soil characteristics, including the range of soil particle sizes expected to be present on the site;

(6) Provide and maintain natural buffers around surface waters, direct stormwater to vegetated areas to increase sediment removal and maximize stormwater infiltration, unless infeasible (see section 4.1.2 below (*Buffer zone requirements*)); and

(7) Minimize soil compaction and, unless infeasible, preserve topsoil.

4.1.2 Buffer zone requirements

Buffer zone requirements in this section apply to all streams adjacent to construction sites, with an exception for streams designated as impaired or Exceptional Tennessee waters (see section 5.4.2 below (*Buffer zone requirements for discharges into impaired or exceptional TN waters)*). A 30-foot natural riparian buffer zone adjacent to all streams at the construction site shall be preserved, to the maximum extent practicable, during construction activities at the site. The water quality buffer zone is required to protect waters of the state (e.g., perennial and intermittent streams, rivers, lakes, wetlands) located within or immediately adjacent to the boundaries of the project, as identified using methodology from Standard Operating Procedures for Hydrologic Determinations (see rules to implement a certification program for Qualified Hydrologic Professionals, TN Rules Chapter 0400-40-17). Buffer zones are not primary sediment control measures and should not be relied on as such. Rehabilitation and enhancement of a natural buffer zone is allowed, if necessary, for improvement of its effectiveness of protection of the waters of the state. The buffer zone requirement only applies to new construction sites, as described in section 2.4.2 above (*Application for new permit coverage*).

The riparian buffer zone should be preserved between the top of stream bank and the disturbed construction area. The 30-feet criterion for the width of the buffer zone can be established on an average width basis at a project, as long as the minimum width of the buffer zone is more than 15 feet at any measured location.

Every attempt should be made for construction activities not to take place within the buffer zone. BMPs providing equivalent protection to a receiving stream as a natural riparian zone may be used at a construction site. Such equivalent BMPs shall be designed to be as effective in protecting the receiving stream from effects of stormwater runoff as a natural riparian zone. A justification for use and a design of equivalent BMPs shall be included in the SWPPP. Such equivalent BMPs are expected to be routinely used at construction projects typically located adjacent to surface waters. These projects include, but are not limited to: sewer line construction, roadway construction, utility line or equipment installation, greenway construction, construction of a permanent outfall or a velocity dissipating structure, etc.

This requirement does not apply to any valid Aquatic Resources Alteration Permit (ARAP), or equivalent permits issued by federal authorities. Additional buffer zone requirements may be established by the local MS4 program.

4.1.2.1 Buffer zone exemption based on existing uses

Buffer zones as described in section 4.1.2 above (*Buffer zone requirements*) shall not be required to portions of the buffer where certain land uses exist and are to remain in place according to the following:

1. A use shall be considered existing if it was present within the buffer zone as of the date of the Notice of Intent for coverage under the CGP. Existing uses shall include, but not be limited to, buildings, parking lots, roadways, utility lines and on-site sanitary sewage systems. Only the portion of the buffer zone that contains the footprint of the existing land use is exempt from buffer zones. Activities necessary to maintain uses are allowed provided that no additional vegetation is removed from the buffer zone.
2. If an area with an existing land use is proposed to be converted to another use or the impervious surfaces located within the buffer area are being removed buffer zone requirements shall apply.

4.1.2.2 Pre-Approved Sites

Construction activity at sites that have been pre-approved before February 1, 2010, are exempt from the buffer requirements of section 4.1.2 above (*Buffer zone requirements*). Evidence of pre-approval for highway projects shall be a final right-of-way plan and for other construction projects,

the final design drawings with attached dated, written approval by the local, state or federal agency with authority to approve such design drawings for construction.

4.1.3 Soil stabilization

Stabilization of disturbed areas must, at a minimum, be initiated immediately whenever any clearing, grading, excavating or other earth disturbing activities have temporarily or permanently ceased on any portion of the site, and will not resume for a period exceeding 14 calendar days. Soil stabilization (temporary or permanent) of those of disturbed areas must be completed as soon as possible, but not later than 14 days after the construction activity in that portion of the site has temporarily or permanently ceased. In arid, semiarid, and drought-stricken areas where initiating vegetative stabilization measures immediately is infeasible, alternative stabilization measures (such as, but not limited to: properly anchored mulch, soil binders, matting) must be employed.

4.1.4 Dewatering

Discharges from dewatering activities, including discharges from dewatering of trenches and excavations, are prohibited unless managed by appropriate controls. Appropriate controls include, but are not limited to: weir tank, dewatering tank, gravity bag filter, sand media particulate filter, pressurized bag filter, cartridge filter or other control units providing the level of treatment necessary to comply with permit requirements.

4.1.5 Pollution prevention measures

The permittee must design, install, implement, and maintain effective pollution prevention measures to minimize the discharge of pollutants. At a minimum, such measures must be designed, installed, implemented and maintained to:

(1) Minimize the discharge of pollutants from equipment and vehicle washing, wheel wash water, and other wash waters. Wash waters must be treated in a sediment basin or alternative control that provides equivalent or better treatment prior to discharge;
(2) Minimize the exposure of building materials, building products, construction wastes, trash, landscape materials, fertilizers, pesticides, herbicides, detergents, sanitary waste and other materials present on the site to precipitation and to stormwater; and
(3) Minimize the discharge of pollutants from spills and leaks and implement chemical spill and leak prevention and response procedures.

4.1.6 Prohibited discharges

The following discharges are prohibited:

(1) Wastewater from washout of concrete, unless managed by an appropriate control;
(2) Wastewater from washout and cleanout of stucco, paint, form release oils, curing compounds and other construction materials;
(3) Fuels, oils, or other pollutants used in vehicle and equipment operation and maintenance; and
(4) Soaps or solvents used in vehicle and equipment washing.

4.1.7 Surface outlets

When discharging from basins and impoundments, utilize outlet structures that only withdraw water from near the surface of the basin or impoundment, unless infeasible.

SECTION 5 SPECIAL CONDITIONS, MANAGEMENT PRACTICES, AND OTHER NON-NUMERIC LIMITATIONS

5.1 RELEASES IN EXCESS OF REPORTABLE QUANTITIES

The discharge of hazardous substances or oil in the stormwater discharge(s) from a facility shall be prevented or minimized in accordance with the applicable stormwater pollution prevention plan for the facility. This policy does not relieve the permittee of the reporting requirements of 40 CFR 117 and 40 CFR 302. Where a release containing a hazardous substance in an amount equal to or in excess of a reportable quantity established under either 40 CFR 117 or 40 CFR 302 occurs during a 24 hour period:

a) the permittee is required to notify the National Response Center (NRC) (800-424-8802) and the Tennessee Emergency Management Agency (emergencies: 800-262-3300; non-emergencies: 800-262-3400) in accordance with the requirements of 40 CFR 117 or 40 CFR 302 as soon as he or she has knowledge of the discharge;

b) the permittee shall submit, within 14 days of knowledge of the release, a written description of: the release (including the type and estimate of the amount of material released), the date that such release occurred, the circumstances leading to the release, what actions were taken to mitigate effects of the release, and steps to be taken to minimize the chance of future occurrences, to the appropriate Environmental Field Office; and

c) the SWPPP required under part 3 above of this policy must be updated within 14 days of knowledge of the release: to provide a description of the release, the circumstances leading to the release, and the date of the release. This can be accomplished by including a copy of a written description of the release as described in the paragraph b) above. In addition, the SWPPP must be reviewed to identify measures to prevent the reoccurrence of such releases and to respond to such releases, and the plan must be modified where appropriate.

5.2 SPILLS

This policy does not authorize the discharge of hazardous substances or oil resulting from an on-site spill.

5.3 DISCHARGE COMPLIANCE WITH STATE WATER QUALITY STANDARDS

5.3.1 Violation of Water Quality Standards

This policy does not authorize stormwater or other discharges that would result in a violation of a state water quality standard (the TDEC Rules, Chapters 1200-4-3, 1200-4-4). Such discharges constitute a violation of this permit.

Where a discharge is already authorized under this policy and the department determines the discharge to cause or contribute to the violation of applicable state water quality standards, the department will notify the operator of such violation(s). The permittee shall take all necessary actions to ensure future discharges do not cause or contribute to the violation of a water quality standard and shall document these actions in the SWPPP.

5.3.2 Discharge quality

a) The construction activity shall be carried out in such a manner that will prevent violations of water quality criteria as stated in the TDEC Rules, Chapter 1200-4-3-.03. This includes but is not limited to the prevention of any discharge that causes a condition in which visible solids, bottom deposits, or turbidity impairs the usefulness of waters of the state for any of the uses designated for that water body by TDEC Rules, Chapter 1200-4-4. Construction activity carried out in the manner required by this policy shall be considered compliance with the TDEC Rules, Chapter 1200-4-3-.03.

b) There shall be no distinctly visible floating scum, oil or other matter contained in the stormwater discharge.
c) The stormwater discharge must not cause an objectionable color contrast in the receiving stream.
d) The stormwater discharge must result in no materials in concentrations sufficient to be hazardous or otherwise detrimental to humans, livestock, wildlife, plant life, or fish and aquatic life in the receiving stream. This provision includes species covered under subpart 1.3 above.

5.4. DISCHARGES INTO IMPAIRED OR EXCEPTIONAL TENNESSEE WATERS

5.4.1. Additional SWPPP/BMP Requirements for discharges into impaired or exceptional TN Waters

Discharges that would add loadings of a pollutant that is identified as causing or contributing to an impairment of a water body on the list of impaired waters, or which would cause degradation to waters designated by TDEC as Exceptional Tennessee waters are not authorized by this policy (see subpart 1.3 above (*Limitations on Coverage*)). To be eligible to obtain and maintain coverage under this permit, the operator must satisfy, at a minimum, the following additional requirements for discharges into waters impaired by siltation (or discharges upstream of such waters and because of the proximity to the impaired segment and the nature of the discharge is likely to contribute pollutants of concern in amounts measurable in the impaired segment that may affect the impaired waters) and for discharges to waters identified by TDEC as Exceptional Tennessee waters (or discharges upstream of such waters and because of the proximity to the exceptional segment and the nature of the discharge is likely to contribute pollutants of concern in amounts measurable in the exceptional segment that may affect the Exceptional Tennessee waters):

a) The SWPPP must certify that erosion prevention and sediment controls used at the site are designed to control storm runoff generated by a 5-year, 24-hour storm event (the design storm - see part 10 below: "2-year and 5-year design storm depths and intensities"), as a minimum, either from total rainfall in the designated period or the equivalent intensity as specified on the following website http://hdsc.nws.noaa.gov/hdsc/pfds/orb/tn_pfds.html. When clay and other fine particle soils are found on sites, additional physical or chemical treatment of stormwater runoff may be used.
b) The SWPPP must be prepared by a person who, at a minimum, has completed the department's Level II Design Principles for Erosion Prevention and Sediment Control for Construction Sites course. This requirement goes in effect 24 months following the new permit effective date. A copy of the certification or training record for inspector certification should be included with the SWPPP.
c) The permittee shall perform inspections described in section 3.5.8 above (*Inspections*) at least twice every calendar week. Inspections shall be performed at least 72 hours apart.
d) The permittee must certify on the form provided in Appendix C of this policy whether or not all planned and designed erosion prevention and sediment controls are installed and in working order. The form must contain the printed name and signature of the inspector and the certification must be executed by a person who meets the signatory requirements of section 7.7.2 below (*Signatory requirements for reports and other items*) of this permit. The record of inspections must be kept at the construction site with a copy of the SWPPP. For record retention requirements, see part 6 below.
e) The director may require revisions to the SWPPP necessary to prevent a negative impact to legally protected state or federally listed aquatic fauna, their habitat, or the receiving waters.

5.4.2 Buffer zone requirements for discharges into impaired or exceptional TN waters

For sites that contain and/or are adjacent to a receiving stream designated as impaired or Exceptional Tennessee waters a 60-foot natural riparian buffer zone adjacent to the receiving stream shall be preserved, to the maximum extent practicable, during construction activities at the site. The water quality buffer zone is required to protect waters of the state (e.g., perennial and intermittent streams, rivers, lakes, wetlands) located within or immediately adjacent to the boundaries of the project, as identified using methodology from Standard Operating Procedures for Hydrologic Determinations (see rules to implement a certification program for Qualified Hydrologic Professionals , TN Rules Chapter 0400-40-17). Buffer zones are not primary sediment control measures and should not be relied on as such. Rehabilitation and enhancement of a natural buffer zone is allowed, if necessary, for improvement of its effectiveness of protection of the waters of the state. The buffer zone requirement only applies to new construction sites, as described in section 2.4.2 above (*Application for new permit coverage*).

The natural buffer zone should be established between the top of stream bank and the disturbed construction area. The 60-feet criterion for the width of the buffer zone can be established on an average width basis at a project, as long as the minimum width of the buffer zone is more than 30 feet at any measured location.

Every attempt should be made for construction activities not to take place within the buffer zone. BMPs providing equivalent protection to a receiving stream as a natural riparian zone may be used at a construction site. Such equivalent BMPs shall be designed to be as effective in protecting the receiving stream from effects of stormwater runoff as a natural buffer zone. A justification for use and a design of equivalent BMPs shall be included in the SWPPP. Such equivalent BMPs are expected to be routinely used at construction projects typically located adjacent to surface waters. These projects include, but are not limited to: sewer line construction, roadway construction, utility line or equipment installation, greenway construction, construction of a permanent outfall or a velocity dissipating structure, etc.

This requirement does not apply to an area that is being altered under the authorization of a valid Aquatic Resources Alteration Permit (ARAP), or equivalent permits issued by federal authorities. Additional natural buffer zone requirements may be established by the local MS4 program.

5.4.2.1 Buffer zone exemption based on existing uses

Buffer zones as described in section 5.4.2 above (*Buffer zone requirements for discharges into impaired or exceptional TN waters*) shall not be required to portions of the buffer where certain land uses exist and are to remain in place according to the following:

1. A use shall be considered existing if it was present within the buffer zone as of the date of the Notice of Intent for coverage under the CGP. Existing uses shall include, but not be limited to, buildings, parking lots, roadways, utility lines and on-site sanitary sewage systems. Only the portion of the buffer zone that contains the footprint of the existing land use is exempt from buffer zones. Activities necessary to maintain uses are allowed provided that no additional vegetation is removed from the buffer zone.
2. If an area with an existing land use is proposed to be converted to another use or the impervious surfaces located within the buffer area are being removed buffer zone requirements shall apply.

5.4.3 Pre-Approved sites

Construction activity at sites that have been pre-approved before June 16, 2005, are exempt from the design storm requirements of section 5.4.1 a) and e) above and the buffer requirements of section 5.4.2 above (*Buffer zone requirements for discharges into impaired or exceptional TN waters*). Evidence of pre-approval for highway projects shall be a final right-of-way plan and for other construction projects, the final design drawings with attached dated, written approval by the local, state or federal agency with authority to approve such design drawings for construction.

SECTION 6 RETENTION, ACCESSIBILITY AND SUBMISSION OF RECORDS

6.1 DOCUMENTS

The permittee shall retain copies of stormwater pollution prevention plans and all reports required by this permit, and records of all data used to complete the NOI and the NOT to be covered by this permit, for a period of at least three years from the date the notice of termination is submitted. This period may be extended by written request of the director.

6.2 ACCESSIBILITY AND RETENTION OF RECORDS

The permittee shall retain a copy of the SWPPP required by this policy (including a copy of the permit) at the construction site (or other local location accessible to the director and the public) from the date construction commences to the date of termination of permit coverage. Permittees with day-to-day operational control over pollution prevention plan implementation shall have a copy of the SWPPP available at a central location onsite for the use of all operators and those identified as having responsibilities under the plan whenever they are on the construction site. Once coverage is terminated, the permittee shall maintain a copy of all records for a period of three years.

6.2.1 Posting information at the construction site

The permittee shall post a notice near the main entrance of the construction site accessible to the public with the following information:

a) A copy of the NOC with the NPDES permit tracking number for the construction project;
b) Name, company name, E-mail address (if available), telephone number and address of the project site owner/operator or a local contact person;
c) A brief description of the project; and
d) The location of the SWPPP (see section 3.3.3 above (*Making plans available*)).

The notice must be maintained in a legible condition. If posting this information near a main entrance is infeasible due to safety concerns, or not accessible to the public, the notice shall be posted in a local public building. If the construction project is a linear construction project (e.g., pipeline, highway, etc.), the notice must be placed in a publicly accessible location near where construction is actively underway and moved as necessary. This policy does not provide the public with any right to trespass on a construction site for any reason, including inspection of a site. This policy does not require that permittees allow members of the public access to a construction site.

The permittee shall also retain the following items/information in an appropriate location on-site:

a) A rain gauge;
b) A copy of twice weekly inspection reports;
c) A documentation of quality assurance site assessments, if applicable (see section 3.1.2 above (*Site Assessment*)); and

d) A copy of the site inspector's Fundamentals of Erosion Prevention and Sediment Control Level 1 certification.

6.3 ELECTRONIC SUBMISSION OF NOIs, NOTs AND REPORTS

If the department notifies dischargers (directly by mail or E-mail, by public notice, or by making information available on the world wide web) of electronic forms or other report options that become available at a later date (e.g., electronic submission of forms), the operators may take advantage of those options to satisfy the NOI, NOT and other report notification requirements.

SECTION 7 STANDARD POLICY CONDITIONS

7.1 DUTY TO COMPLY

7.1.1 Permittee's duty to comply

The permittee must comply with all conditions of this permit. Any policy noncompliance constitutes a violation of the Tennessee Water Quality Control Act (TWQCA) and is grounds for enforcement action; for permit termination, revocation and reissuance, or modification; or for denial of a permit renewal application.

7.1.2 Penalties for violations of permit conditions

Please refer to the City of Knoxville Stormwater and Street Ordinance.

In some cases enforcement will revert back to TDEC, see sections 7.1.3 & 7.1.4 below (*Civil and criminal liability* and *Liability under state law*, respectively).

7.1.3 Civil and criminal liability

Nothing in this policy shall be construed to relieve the discharger from civil or criminal penalties for noncompliance. Notwithstanding this permit, the discharger shall remain liable for any damages sustained by the State of Tennessee, including but not limited to fish kills and losses of aquatic life and/or wildlife, as a result of the discharge to any surface or subsurface waters. Additionally, notwithstanding this permit, it shall be the responsibility of the discharger to conduct stormwater discharge activities in a manner such that public or private nuisances or health hazards will not be created. Furthermore, nothing in this policy shall be construed to preclude the State of Tennessee from any legal action or relieve the discharger from any responsibilities, liabilities, or penalties established pursuant to any applicable state law or the Federal Water Pollution Control Act.

7.1.4 Liability under state law

Nothing in this policy shall be construed to preclude the institution of any legal action or relieve the permittee from any responsibilities, liabilities, or penalties established pursuant to any applicable local, state or federal law.

7.2 CONTINUATION OF THE EXPIRED GENERAL PERMIT

Permittees shall maintain coverage under this general permit until a new general permit is issued. Permittees who choose not to maintain coverage under the expired general permit, or are required to obtain an individual permit, must submit an application (U.S. EPA NPDES Forms 1 and 2F and any other applicable forms) at least 180 days prior to expiration of this general permit.

Permittees who are eligible and choose to be covered by the new general permit must submit an NOI by the date specified in that permit. Facilities that have not obtained coverage under this policy by the permit expiration date cannot become authorized to discharge under the continued permit.

Operator(s) of an existing site permitted under the TDEC's 2005 construction general permit shall maintain full compliance with the existing SWPPP. The existing SWPPP should be modified, if necessary, to meet requirements of this new general permit, and the SWPPP changes implemented no later than 12 months following the new permit effective date. The permittee shall make the updated SWPPP available for the department's review upon request.

7.3 NEED TO HALT OR REDUCE ACTIVITY NOT A DEFENSE

It shall not be a defense for a permittee in an enforcement action that it would have been necessary to halt or reduce the permitted activity in order to maintain compliance with the conditions of this permit.

7.4 DUTY TO MITIGATE

The permittee shall take all reasonable steps to minimize or prevent any discharge in violation of this policy that has a reasonable likelihood of adversely affecting human health or the environment.

7.5 DUTY TO PROVIDE INFORMATION

The permittee shall furnish to the department or an authorized representative of the department, within a time specified by the department, any information that the department may request to determine compliance with this policy or other information relevant to the protection of the waters of the state. The permittee shall also furnish to the department, upon request, copies of records required to be kept by this permit.

7.6 OTHER INFORMATION

When the permittee becomes aware that he or she failed to submit any relevant facts or submitted incorrect information in the Notice of Intent or in any other report to the director, he or she shall promptly submit such facts or information.

7.7 SIGNATORY REQUIREMENTS

All Notices of Intent (NOIs), stormwater pollution prevention plans (SWPPPs), requests for termination of permit coverage (NOTs), Construction Stormwater Inspection Certifications, Construction Stormwater Monitoring Report forms, reports, certifications or information either submitted to the director or the operator of a large or medium municipal separate storm sewer system and/or any other information either submitted to the department, or that this policy requires be maintained by the permittee, shall be signed as described in sections 7.7.1 and 7.7.2 below (*Signatory requirements for a Notice of Intent (NOI)* and *Signatory requirements for reports and other items*) and dated.

7.7.1 Signatory requirements for a Notice of Intent (NOI)[1]

NOI shall be signed as follows:

a) For a corporation, by a responsible corporate officer. For the purpose of this section, a responsible corporate officer means:
   (i) a president, secretary, treasurer, or vice-president of the corporation in charge of a principal business function, or any other person who performs similar policy or decision-making functions for the corporation, or
   (ii) the manager of one or more manufacturing, production, or operating facilities, provided, the manager is authorized to make management decisions which govern the operation of the regulated site including having the explicit or implicit duty of making major capital investment

[1] As specified in 40 CFR 122.22(a)(1)-(3) [48 FR 14153, Apr. 1, 1983, as amended at 48 FR 39619, Sept. 1, 1983; 49 FR 38047, Sept. 29, 1984; 50 FR 6941, Feb. 19, 1985; 55 FR 48063, Nov. 16, 1990; 65 FR 30907, May 15, 2000]

recommendations, and initiating and directing other comprehensive measures to assure long term environmental compliance with environmental laws and regulations; the manager can ensure that the necessary systems are established or actions taken to gather complete and accurate information for permit application requirements; and where authority to sign documents has been assigned or delegated to the manager in accordance with corporate procedures.

NOTE: The department does not require specific assignments or delegations of authority to responsible corporate officers. The department will presume that these responsible corporate officers have the requisite authority to sign permit applications unless the corporation has notified the director to the contrary. Corporate procedures governing authority to sign permit applications may provide for assignment or delegation to applicable corporate positions rather than to specific individuals.

b) For a partnership or sole proprietorship, by a general partner or the proprietor, respectively.
c) For a municipality, state, federal, or other public agency, by either a principal executive officer or ranking elected official. For purposes of this section, a principal executive officer of a Federal agency includes:
   (i) the chief executive officer of the agency, or
   (ii) a senior executive officer having responsibility for the overall operations of a principal geographic unit of the agency (e.g., Regional Administrators of EPA).

7.7.2 Signatory requirements for reports and other items

SWPPPs, Construction Stormwater Inspection Certification forms, reports, certifications or other information submittals required by the policy and other information requested by the department, including but not limited to Notice of Violation responses, shall be signed by a person described in section 7.7.1 above (*Signatory requirements for a Notice of Intent (NOI)*), or by a duly authorized representative of that person.

7.7.3 Duly authorized representative

For a purpose of satisfying signatory requirements for reports (see section 7.7.2 above (*Signatory requirements for reports and other items*)), a person is a duly authorized representative only if:

a) the authorization is made in writing by a person described in section 7.7.1 above (*Signatory requirements for a Notice of Intent (NOI)*);
b) the authorization specifies either an individual or a position having responsibility for the overall operation of the regulated site or activity such as the position of plant manager, superintendent, position of equivalent responsibility, or an individual or position having overall responsibility for environmental matters for the company; a duly authorized representative may thus be either a named individual or any individual occupying a named position and,
c) the written authorization is submitted to the director or an appropriate EFO. The written authorization shall be a written document including the name of the newly authorized person and the contact information (title, mailing address, phone number, fax number and E-mail address) for the authorized person. The written authorization shall be signed by the newly authorized person accepting responsibility and by the person described in section 7.7.1 above (*Signatory requirements for a Notice of Intent (NOI)*) delegating the authority.

7.7.4 Changes to authorization

If an authorization under sections 7.7.1 above (*Signatory requirements for a Notice of Intent (NOI)*) or 7.7.3 above (*Duly authorized representative*) is no longer accurate because a different individual or position has responsibility as the primary or secondary permittee, but the company name (permittee name) remains the same, a new NOI and SWPPP certification shall be submitted to the City of Knoxville Engineering Department or an appropriate EFO and signed by the new party who meets signatory authority satisfying the requirements of sections 7.7.1 above (*Signatory requirements for a Notice of Intent (NOI)*) or 7.7.3 above (*Duly authorized representative*). The NOI shall include the new individual's information (title, mailing address, phone number, fax number and E-mail address), the existing tracking number and the project name.

7.7.5 Signatory requirements for primary permittees

Primary permittees required to sign an NOI and SWPPP because they meet the definition of an operator (see subpart 2.2 above (*Typical Construction Site Operators*)) shall sign the following certification statement on the NOI and SWPPP:

> "*I certify under penalty of law that this document and all attachments were prepared under my direction or supervision in accordance with a system designed to assure that qualified personnel properly gather and evaluate the information submitted. Based on my inquiry of the person or persons who manage the system, or those persons directly responsible for gathering the information, the information submitted is, to the best of my knowledge and belief, true, accurate, and complete. I am aware that there are significant penalties for submitting false information, including the possibility of fine and imprisonment for knowing violations.*"

7.7.6 Signatory requirements for secondary permittees

Secondary permittees (typically construction contractors) required to sign an NOI and SWPPP because they meet the definition of an operator but who are not primarily responsible for preparing an NOI and SWPPP, shall sign the following certification statement on the NOI and SWPPP:

> *"I certify under penalty of law that I have reviewed this document, any attachments, and the SWPPP referenced above. Based on my inquiry of the construction site owner/developer identified above and/or my inquiry of the person directly responsible for assembling this NOI and SWPPP, I believe the information submitted is accurate. I am aware that this NOI, if approved, makes the above-described construction activity subject to NPDES permit number TNR100000, and that certain of my activities on-site are thereby regulated. I am aware that there are significant penalties, including the possibility of fine and imprisonment for knowing violations, and for failure to comply with these permit requirements."*

7.8 PENALTIES FOR FALSIFICATION OF REPORTS

Knowingly making any false statement on any report or form required by this policy may result in the imposition of criminal penalties as provided for in Section 309 of the Clean Water Act and in T.C.A. §69-3-115 of the Tennessee Water Quality Control Act.

7.9. OIL AND HAZARDOUS SUBSTANCE LIABILITY

Nothing in this policy shall be construed to preclude the institution of any legal action or relieve the permittee from any responsibilities, liabilities, or penalties to which the permittee is or may be subject to Section 311 of the Clean Water Act or Section 106 of the Comprehensive Environmental Response, Compensation and Liability Act of 1980 (CERCLA).

7.10 PROPERTY RIGHTS

The issuance of this policy does not convey any property rights of any sort, nor any exclusive privileges, nor does it authorize any injury to private property or any invasion of personal rights, nor any infringement of federal, state or local laws or regulations. The issuance of this policy does not authorize trespassing or discharges of stormwater or non-stormwater across private property.

7.11 SEVERABILITY

The provisions of this policy are severable, and if any provision of this permit, or the application of any provision of this policy to any circumstance, is held invalid, the application of such provision to other circumstances, and the remainder of this policy shall not be affected thereby.

7.12 REQUIRING AN INDIVIDUAL PERMIT

7.12.2 Permittee may request individual permit instead of coverage under this general permit to be issued by TDEC.

Any discharger authorized by this policy may request to be excluded from the coverage of this policy by applying for an individual permit. Any discharger that knowingly cannot abide by the terms and conditions of this policy must apply for an individual permit. In such cases, the permittee shall submit an individual application in accordance with the requirements of 40 CFR 122.26(c)(1)(ii), with reasons supporting the request, to the appropriate TDEC's Environmental Field Office. The request may be granted by issuance of an individual permit, or alternative general permit, if the reasons cited by the permittee are adequate to support the request.

7.12.3 Individual permit terminates general permit

When an individual NPDES permit is issued to a discharger otherwise subject to this permit, or the discharger is authorized to discharge under an alternative NPDES general permit, the applicability of this policy to the discharger is terminated on the effective date of the individual permit or the date of authorization of coverage under the alternative general permit, whichever the case may be. When an individual NPDES permit is denied to an owner or operator otherwise subject to this permit, or the owner or operator is denied for coverage under an alternative NPDES general permit, the applicability of this policy to the individual NPDES permittee is terminated on the date of such denial, unless otherwise specified by the director. Coverage under the Tennessee Multi-Sector General Permit for the Discharge of Stormwater from an Industrial Activity (TMSP) will not be considered as an alternative general permit under this section without being specified by the director.

7.13 OTHER, NON-STORMWATER, PROGRAM REQUIREMENTS

No condition of this policy shall release the permittee from any responsibility or requirements under other environmental statutes or regulations.

7.14 PROPER OPERATION AND MAINTENANCE

The permittee shall at all times properly operate and maintain all facilities and systems of treatment and control (and related equipment) which are installed or used by the permittee to achieve compliance with the conditions of this policy and with the requirements of stormwater pollution prevention plans.

Proper operation and maintenance also includes adequate laboratory quality assurance and quality control procedures. Proper operation and maintenance requires the operation of backup or auxiliary facilities or similar systems, installed by a permittee, when determined by the permittee or the department to be necessary to achieve compliance with the conditions of the permit.

7.15 INSPECTION AND ENTRY

The permittee shall allow authorized representatives of the Environmental Protection Agency, the director or an authorized representative of the commissioner of TDEC, or, in the case of a construction site which discharges through a municipal separate storm sewer, an authorized representative of the MS4 receiving the discharge, upon the presentation of credentials and other documents as may be required by law:

a) to enter upon the permittee's premises where a regulated facility or activity is located or conducted or where records must be kept under the conditions of this permit;
b) to have access to and copy at reasonable times, any records that must be kept under the conditions of this permit; and
c) to inspect any facilities or equipment (including monitoring and control equipment).

7.16 POLICY ACTIONS

This policy may be issued, modified, revoked, reissued or terminated for cause in accordance with this policy and the applicable requirements of T.C.A. § 69-3-108. The filing of a request by the permittee for a permit modification, revocation and reissuance, or termination, or a notification of planned changes or anticipated noncompliance does not stay any permit condition.

SECTION 8 REQUIREMENTS FOR TERMINATION OF COVERAGE

8.1 TERMINATION OF DEVELOPER AND BUILDER COVERAGE

8.1.1 Termination process for primary permittees

Primary permittees wishing to terminate coverage under this policy must submit a completed notice of termination (NOT) form, provided in Appendix B of this policy (or copy thereof). Primary permittees who abandon the site and fail to submit the NOT will be in violation of this permit. Signs notifying the public of the construction activity shall be in place until the NOT form has been submitted. Primary permittees may terminate permit coverage only if the conditions described in items 1, 2 or 3 below occur at the site:

1. All earth-disturbing activities at the site are completed and, if applicable, construction support activities permitted under section 1.2.2 above (*Stormwater discharges associated with construction support activities)*, and the following requirements are met:

   (a) For any areas that
   - were disturbed during construction,
   - are not covered over by permanent structures, and
   - over which the permittee had control during the construction activities the requirements for final vegetative or non-vegetative stabilization described in sub-section 3.5.3.2 (*Stabilization practices*) above are met;

   (b) The permittee has removed and properly disposed of all construction materials, waste and waste handling devices, and have removed all equipment and vehicles that were used during construction, unless intended for long-term use following termination of permit coverage;
   (c) The permittee has removed all stormwater controls that were installed and maintained during construction, except those that are intended for long-term use following termination of permit coverage;
   (d) The permittee has removed all potential pollutants and pollutant-generating activities associated with construction, unless needed for long-term use following termination of permit coverage; and
   (e) The permittee must identify who is responsible for ongoing maintenance of any stormwater controls left on the site for long-term use following termination of permit coverage; or

2. The permittee has transferred control of all areas of the site for which he is responsible (including, but not limited to, infrastructure, common areas, stormwater drainage structures, sediment control basin, etc.) under this policy to another operator, and that operator has submitted an NOI and obtained coverage under this permit; or
3. The permittee obtains coverage under an individual or alternative general NPDES permit.

8.1.2 Notice of Termination (NOT) review

The department will review NOTs for completeness and accuracy and, when necessary, investigate the proposed site for which the NOT was submitted. Upon completing the NOT review, the department will:

1) prepare and transmit a notification that a NOT form was received;
2) notify the applicant of needed changes to their NOT submittal; or
3) deny a request for termination of coverage under this general permit.

The department retains the right to deny termination of coverage under this general permit upon receipt of the NOT. If the department has information indicating that the permit coverage is not eligible for termination, written notification will be provided that permit coverage has not been terminated. The notification will include a summary of existing deficiencies. When the site meets the termination criteria, the NOT should be re-submitted.

If any permittee files for bankruptcy or the site is foreclosed on by the lender, the permittee should notify the department of the situation so that the department may assess the site to determine if permit coverage should be obtained by any other person or whether other action is needed.

8.2 TERMINATION OF BUILDER AND CONTRACTOR COVERAGE

8.2.1 Termination process for secondary permittees

Secondary permittees (builders/contractors) must request termination of coverage under this policy by submitting an NOT when they are no longer an operator at the construction site. Secondary permittees receive coverage under this permit, but are not normally mailed a Notice of Coverage. Consequently, the department may, but is not required to, notify secondary permittees that their notice of termination has been received. If the department has reason to believe that the secondary permittee's NOT should not have been submitted, the department will deny the secondary permittee's NOT in writing, with specific reasons as to why the NOT should not have been submitted.

8.3 NOT CERTIFICATION

The NOT and the following certification must be signed in accordance with subpart 7.7 above (*Signatory Requirements*) of this permit:

> *"I certify under penalty of law that either: (a) all stormwater discharges associated with construction activity from the portion of the identified facility where I was an operator have ceased or have been eliminated or (b) I am no longer an operator at the construction site. I understand that by submitting this notice of termination, I am no longer authorized to discharge stormwater associated with construction activity under this general permit, and that discharging pollutants in stormwater associated with construction activity to waters of the United States is unlawful under the Clean Water Act where the discharge is not authorized by a NPDES permit. I also understand that the submittal of this notice of termination does not release an operator from liability for any violations of this permit or the Clean Water Act."*

8.4 WHERE TO SUBMIT A NOTICE OF TERMINATION (NOT)?

The NOT shall be submitted to the City of Knoxville Engineering Department or Environmental Field Office (EFO) which issued the NOC to the primary permittee. The appropriate permit tracking number must be clearly printed on the form.

SECTION 9 AQUATIC RESOURCE ALTERATION PERMITS (ARAP)

Alterations to channels or waterbodies (stream, wetland and/or other waters of the state) that are contained on, traverse through or are adjacent to the construction site, may require an Aquatic Resources Alteration Permit (ARAP)
(http://www.tn.gov/environment/permits/arap.shtml). It is the responsibility of the developer to provide a determination of the water's status. This determination must be conducted using methodology from Standard Operating Procedures for Hydrologic Determinations (see rules to implement a certification program for Qualified Hydrologic Professionals, TN Rules Chapter 0400-40-17). The permittee can make an assumption that streams/wetlands are present at the site in order to expedite the permit process. In some cases, issuance of coverage under the CGP may be delayed or withheld if the appropriate ARAP has not been obtained. At a minimum, any delay in obtaining an ARAP for water body alteration associated with the proposed project must be adequately addressed in the SWPPP prior to issuance of an NOC**.** Failure to obtain an ARAP prior to any actual alteration may result in enforcement action for the unauthorized alteration.

SECTION 10 DEFINITIONS

"**2-year and 5-year design storm depths and intensities**" The estimated design rainfall amounts, for any return period interval (i.e., 2-yr, 5-yr, 25-yr, etc,) in terms of either 24-hour depths or intensities for any duration, can be found by accessing the following NOAA National Weather Service Atlas 14 data for Tennessee: http://hdsc.nws.noaa.gov/hdsc/pfds/orb/tn_pfds.html. Other data sources may be acceptable with prior written approval by TDEC Water Pollution Control.

"Best Management Practices" ("BMPs") means schedules of activities, prohibitions of practices, maintenance procedures, and other management practices to prevent or reduce the discharge of pollutants to waters of the state. BMPs also include treatment requirements, operating procedures, and practices to control plant site runoff, spillage or leaks, sludge or waste disposal, or drainage from raw material storage.

"Borrow Pit" is an excavation from which erodible material (typically soil) is removed to be fill for another site. There is no processing or separation of erodible material conducted at the site. Given the nature of activity and pollutants present at such excavation, a borrow pit is considered a construction activity for the purpose of this permit.

"**Buffer Zone**" is a strip of dense undisturbed perennial native vegetation, either original or re-established, that borders streams and rivers, ponds and lakes, wetlands, and seeps. Buffer zones are established for the purposes of slowing water runoff, enhancing water infiltration, and minimizing the risk of any potential nutrients or pollutants from leaving the upland area and reaching surface waters. Buffer zones are most effective when stormwater runoff is flowing into and through the buffer zone as shallow sheet flow, rather than in concentrated form such as in channels, gullies, or wet weather conveyances. Therefore, it is critical that the design of any development include management practices, to the maximum extent practical, that will result in stormwater runoff flowing into and through the buffer zone as shallow sheet flow. Buffer zones are established for the primary purpose of protecting water quality and maintaining a healthy aquatic ecosystem in receiving waters.

"Clearing" in the definition of discharges associated with construction activity, typically refers to removal of vegetation and disturbance of soil prior to grading or excavation in anticipation of construction activities. Clearing may also refer to wide area land disturbance in anticipation of non-construction activities; for

instance, clearing forested land in order to convert forestland to pasture for wildlife management purposes. Clearing, grading and excavation do not refer to clearing of vegetation along existing or new roadways, highways, dams or power lines for sight distance or other maintenance and/or safety concerns, or cold planing, milling, and/or removal of concrete and/or bituminous asphalt roadway pavement surfaces. The clearing of land for agricultural purposes is exempt from federal stormwater NPDES permitting in accordance with Section 401(1)(1) of the 1987 Water Quality Act and state stormwater NPDES permitting in accordance with the Tennessee Water Quality Control Act of 1977 (T.C.A. 69-3-101 et seq.).

"Commencement of construction" The initial disturbance of soils associated with clearing, grading, or excavating activities or other construction activities.

"Common plan of development or sale" is broadly defined as any announcement or documentation (including a sign, public notice or hearing, sales pitch, advertisement, drawing, permit application, zoning request, computer design, etc.) or physical demarcation (including boundary signs, lot stakes, surveyor markings, etc.) indicating construction activities may occur on a specific plot. A common plan of development or sale identifies a situation in which multiple areas of disturbance are occurring on contiguous areas. This applies because the activities may take place at different times, on different schedules, by different operators.

"Control measure" As used in this permit, refers to any Best Management Practice (BMP) or other method used to prevent or reduce the discharge of pollutants to waters of the state.

"CWA" means the Clean Water Act of 1977 or the Federal Water Pollution Control Act (33 U.S.C. 1251, et seq.)

"**Department**" means the City of Knoxville Engineering Department.

"Director" means the director, or authorized representative, of the City of Knoxville Engineering Department.

"Discharge of stormwater associated with construction activity" As used in this permit, refers to stormwater point source discharges from areas where soil disturbing activities (e.g., clearing, grading, excavation, etc.), or construction materials or equipment storage or maintenance (e.g., earth fill piles, fueling, waste material etc.) are located.

"**Final Stabilization**" means that all soil disturbing activities at the site have been completed and one of the three following criteria is met:

a. A uniform (e.g., evenly distributed, without large bare areas) perennial vegetative cover with a uniform density of at least 70 percent of the (preferably) native vegetative cover for the area has been established on all unpaved areas and areas not covered by permanent structures, and all slopes and channels have been permanently stabilized against erosion, or
b. Equivalent permanent stabilization measures (such as the use of riprap; permanent geotextiles, hardened surface materials including concrete, asphalt, gabion baskets, or Reno mattresses) have been employed, or
c. For construction projects on land used for agricultural or silvicultural purposes, final stabilization may be accomplished by returning the disturbed land to its preconstruction agricultural or silvicultural use.

"Exceptional Tennessee waters" are surface waters of the State of Tennessee that satisfy characteristics of exceptional Tennessee waters as listed Chapter 1200-4-3-.06 of the official compilation - Rules and Regulations of the State of Tennessee. Characteristics include waters designated by the Water Quality Control Board as Outstanding National Resource Waters (ONRW); waters that provide habitat for ecologically significant populations of certain aquatic or semi-aquatic plants or animals; waters that provide specialized recreational opportunities; waters that possess outstanding scenic or geologic values; or waters where existing conditions are better than water quality standards.

"**Impaired waters**" (unavailable conditions waters) means any segment of surface waters that has been identified by the TDEC as failing to support one or more classified uses. For the purpose of this permit, pollutants of concern include, but are not limited to: siltation (silt/sediment) and habitat alterations. Based on the most recent assessment information available to staff, the department will notify applicants and permittees if their discharge is into, or is affecting, impaired waters. Resources to be used in making this determination include biennial compilations of impaired waters, databases of assessment information, updated GIS coverages (http://tnmap.tn.gov/wpc/), and the results of recent field surveys. GIS coverages of the streams and lakes not meeting water quality standards, plus the biennial list of impaired waters, can be found at http://tn.gov/environment/topic/wr-wq-water-quality.

"Improved sinkhole" is a natural surface depression that has been altered in order to direct fluids into the hole opening. Improved sinkhole is a type of injection well regulated under the Underground Injection Control (UIC) program. Underground injection constitutes an intentional disposal of waste waters in natural depressions, open fractures, and crevices (such as those commonly associated with weathering of limestone).

"Inspector" An inspector is a person that has successfully completed (has a valid certification from) the "Fundamentals of Erosion Prevention and Sediment Control Level I" course or equivalent course. An inspector performs and documents the required inspections, paying particular attention to time-sensitive permit requirements such as stabilization and maintenance activities. An inspector may also have the following responsibilities:

a) Oversee the requirements of other construction-related permits, such as Aquatic Resources Alteration Permit (ARAP) or Corps of Engineers permit for construction activities in or around waters of the state;
b) Update field SWPPPs;
c) Conduct pre-construction inspection to verify that undisturbed areas have been properly marked and initial measures have been installed; and
d) Inform the permit holder of activities that may be necessary to gain or remain in compliance with the CGP and other environmental permits.

"Linear Project" – is a land disturbing activity as conducted by an underground/overhead utility or highway department, including but not limited to any cable line or wire for the transmission of electrical energy; any conveyance pipeline for transportation of gaseous or liquid substance; any cable line or wire for communications; or any other energy resource transmission ROW or utility infrastructure, e.g., roads and highways. Activities include the construction and installation of these utilities within a corridor. Linear project activities also include the construction of access roads, staging areas, and borrow/spoil sites associated with the linear project. Land disturbance specific to the development of a residential and/or commercial subdivision or high-rise structures is not considered a linear project.

"Monthly" refers to calendar months.

"**Municipal Separate Storm Sewer System**" or "**MS4**" is defined at 40 CFR §122.26(b)(8) to mean a conveyance or system of conveyances (including roads with drainage systems, municipal streets, catch basins, curbs, gutters, ditches, manmade channels, or storm drains):

1. Owned and operated by a state, city, town, borough, county, parish, district, association, or other public body (created by or pursuant to state law) having jurisdiction over disposal of sewage, industrial wastes, stormwater, or other wastes, including special districts under state law such as a sewer district, flood control district or drainage district, or similar entity, or an Indian tribe or an authorized Indian tribal organization, or a designated and approved management agency under section 208 of the CWA that discharges to waters of the United States;

2. Designed or used for collecting or conveying stormwater;

3. Which is not a combined sewer; and
4. Which is not part of a Publicly Owned Treatment Works (POTW) as defined at 40 CFR §122.2.

"NOI" means notice of intent to be covered by this policy (see part 2 above of this permit.)

"NOT" means notice of termination (see part 8 above of this permit).

"**Operator**" for the purpose of this policy and in the context of stormwater associated with construction activity, means any person associated with a construction project that meets either of the following two criteria:

a) This person has operational or design control over construction plans and specifications, including the ability to make modifications to those plans and specifications. This person is typically the owner or developer of the project or a portion of the project, and is considered the primary permittee; or
b) This person has day-to-day operational control of those activities at a project which are necessary to ensure compliance with a SWPPP for the site or other permit conditions. This person is typically a contractor or a commercial builder who is hired by the primary permittee, and is considered a secondary permittee.

It is anticipated that at different phases of a construction project, different types of parties may satisfy the definition of "operator."

"Point source" means any discernible, confined, and discrete conveyance, including but not limited to, any pipe, ditch, channel, tunnel, conduit, well, discrete fissure, container, rolling stock, concentrated animal feeding operation, landfill leachate collection system, vessel or other floating craft from which pollutants are or may be discharged. This term does not include introduction of pollutants from non point-source agricultural and silvicultural activities, including stormwater runoff from orchards, cultivated crops, pastures, range lands, and forest lands or return flows from irrigated agriculture or agricultural stormwater runoff.

"**Qualifying State, Tribal, or local erosion and sediment control program**" is one that includes, as defined in 40 CFR 122.44(s):

(i) Requirements for construction site operators to implement appropriate erosion and sediment control best management practices;
(ii) Requirements for construction site operators to control waste such as discarded building materials, concrete truck washout, chemicals, litter, and sanitary waste at the construction site that may cause adverse impacts to water quality;
(iii) Requirements for construction site operators to develop and implement a stormwater pollution prevention plan. (A stormwater pollution prevention plan includes site descriptions, descriptions of appropriate control measures, copies of approved State, Tribal or local requirements, maintenance procedures, inspection procedures, and identification of non-stormwater discharges); and
(iv) Requirements to submit a site plan for review that incorporates consideration of potential water quality impacts.

"**Quality Assurance Site Assessment**" means documented site inspection to verify the functionality and performance of the SWPPP and for determining if construction, operation and maintenance accurately comply with policy requirements, as presented in the narrative, engineering specifications; maps, plans and drawings; and details for erosion prevention, sediment control and stormwater management.

"**Registered Engineer**" and "**Registered Landscape Architect**" An engineer or landscape architect certified and registered by the State Board of Architectural and Engineer Examiners pursuant to Section 62-202, Tennessee Code Annotated, to practice in Tennessee.

"Runoff coefficient" means the fraction of total rainfall that will appear at the conveyance as runoff. Runoff coefficient is also defined as the ratio of the amount of water that is NOT absorbed by the surface to the total amount of water that falls during a rainstorm.

"**Sediment**" means solid material, both inorganic (mineral) and organic, that is in suspension, is being transported, or has been moved from the site of origin by wind, water, gravity, or ice as a product of erosion.

"Sediment basin" A temporary basin consisting of an embankment constructed across a wet weather conveyance, or an excavation that creates a basin or by a combination of both. A sediment basin typically consists of a forebay cell, dam, impoundment, permanent pool, primary spillway, secondary or emergency spillway, and surface dewatering device. The size and shape of the basin depends on the location, size of drainage area, incoming runoff volume and peak flow, soil type and particle size, land cover, and receiving stream classification (i.e., impaired, HQ, or unimpaired).

"**Sedimentation**" means the action or process of forming or depositing sediment.

"**Significant contributor of pollutants to waters of the state**" means any discharge containing pollutants that are reasonably expected to cause or contribute to an impairment of receiving stream water quality or designated uses.

"**Soil**" means the unconsolidated mineral and organic material on the immediate surface of the earth that serves as a natural medium for the growth of plants.

"**Steep Slope**" A natural or created slope of 35% grade or greater. Designers of sites with steep slopes must pay attention to stormwater management in the SWPPP to engineer runoff non-erosively around or over a steep slope. In addition, site managers should focus on erosion prevention on the slope(s) and stabilize the slope(s) as soon as practicable to prevent slope failure and/or sediment discharges from the project.

"Stormwater" means rainfall runoff, snow melt runoff, and surface runoff and drainage.

"Stormwater associated with industrial activity" is defined at 40 CFR 122.26(b)(14) and incorporated here by reference. Most relevant to this policy is 40 CFR 122.26(b)(14)(x), which relates to construction activity including clearing, grading, filling and excavation activities (including borrow pits containing erodible material). Disturbance of soil for the purpose of crop production is exempted from permit requirements, but stormwater discharges from agriculture-related activities which involve construction of structures (e.g., barn construction, road construction, pond construction, etc.) are considered associated with industrial activity. Maintenance performed to maintain the original line and grade, hydraulic capacity, or original purpose of the facility, e.g. re-clearing, minor excavation performed around an existing structure necessary for maintenance or repair, and repaving of an existing road, is not considered a construction activity for the purpose of this permit.

"Stormwater discharge-related activities" include: activities which cause, contribute to, or result in point source stormwater pollutant discharges, including but not limited to: excavation, site development, grading and other surface disturbance activities; and measures to control stormwater including the siting, construction and operation of best management practices (BMPs) to control, reduce or prevent stormwater pollution.

"**Stormwater Pollution Prevention Plan"**(SWPPP): A written plan required by this policy that includes site map(s), an identification of construction/contractor activities that could cause pollutants in the stormwater, and a description of measures or practices to control these pollutants. It must be prepared and approved before construction begins. In order to effectively reduce erosion and sedimentation impacts, Best Management Practices (BMPs) must be designed, installed, and maintained during land disturbing activities. The SWPPP should be prepared in accordance with the Tennessee Erosion and Sediment Control Handbook. The handbook is designed to provide information to planners, developers, engineers, and contractors on the proper selection, installation, and maintenance of BMPs. The handbook is intended for use during the design and construction of projects that require erosion and sediment controls to protect

waters of the state. It also aids in the development of SWPPPs and other reports, plans, or specifications required when participating in Tennessee's water quality regulations.

"Take" of an endangered species means to harass, harm, pursue, hunt, shoot, wound, kill, trap, capture or collect, or attempt to engage in any such conduct.

"**Temporary stabilization**" is achieved when vegetation and/or a non-erodible surface have been established on the area of disturbance and construction activity has temporarily ceased. Under certain conditions, temporary stabilization is required when construction activities temporarily cease. However, if future construction activity is planned, permit coverage continues.

"**Total maximum daily load**" (TMDL) The sum of the individual wasteload allocations for point sources and load allocations for nonpoint sources and natural background (40 CFR 130.2(I)). TMDL is a study that: quantifies the amount of a pollutant in a stream, identifies the sources of the pollutant, and recommends regulatory or other actions that may need to be taken in order for the stream to cease being polluted. Some of the actions that might be taken are:

1) Re-allocation of limits on the sources of pollutants documented as impacting streams. It might be necessary to lower the amount of pollutants being discharged under NPDES permits or to require the installation of other control measures, if necessary, to ensure that water quality standards will be met.

2) For sources over which the department does not have regulatory authority, such as ordinary agricultural or forestry activities, provide information and technical assistance to other state and federal agencies that work directly with these groups to install appropriate Best Management Practices (BMPs).

   Even for impacted streams, TMDL development is not considered appropriate for all bodies of water: if enforcement has already been taken and a compliance schedule has been developed; or if best management practices have already been installed for non-regulated activities, the TMDL is considered not applicable. In cases involving pollution sources in other states, the recommendation may be that another state or EPA perform the TMDL . TMDLs can also be described by the following equation:

   TMDL = sum of non point sources (LA)+ sum of point sources (WLA)+ margin of safety

   A list of completed TMDLs that have been approved by EPA can be found at this web site: http://tn.gov/environment/article/wr-ws-tennessees-total-maximum-daily-load-tmdl-program.

"Turbidity" is the cloudiness or haziness of a fluid caused by individual particles (suspended solids) that are generally invisible to the naked eye, similar to smoke in air.

"**Waters**" or "**waters of the state**" means any and all water, public or private, on or beneath the surface of the ground, which are contained within, flow through, or border upon Tennessee or any portion thereof except those bodies of water confined to and retained within the limits of private property in single ownership which do not combine or effect a junction with natural surface or underground waters.

"**Waste site**" is an area where material from a construction site is disposed of. When the material is erodible, such as soil, the site must be treated as a construction site.

"**Wet weather conveyances**" are man-made or natural watercourses, including natural watercourses that have been modified by channelization that flow only in direct response to precipitation runoff in their immediate locality; whose channels are at all times above the ground water table; that are not suitable for drinking water supplies; and in which hydrological and biological analyses indicate that, under normal weather conditions, due to naturally occurring ephemeral or low flow there is not sufficient water to support fish or multiple populations of obligate lotic aquatic organisms whose life cycle includes an aquatic phage of at least two months. (Rules and Regulations of the State of Tennessee, Chapter 1200-4-3-.04(3)).

SECTION 11 LIST OF ACRONYMS

ARAP	Aquatic Resource Alteration Permit
BMP	Best Management Practice
CERCLA	Comprehensive Environmental Response, Compensation and Liability Act
CGP	Construction General Permit
COK	City of Knoxville
CWA	Clean Water Act
EFO	Environmental Field Office
EPA	(U.S.) Environmental Protection Agency
EPSC	Erosion Prevention and Sediment Control
MS4	Municipal Separate Storm Sewer System
NOC	Notice of Coverage
NOI	Notice of Intent
NOT	Notice of Termination
NPDES	National Pollutant Discharge Elimination System
ONRW	Outstanding National Resource Waters
POTW	Publicly Owned Treatment Works
SWPPP	Stormwater Pollution Prevention Plan
TDEC	Tennessee Department of Environment and Conservation
TDOT	Tennessee Department of Transportation
TMDL	Total Maximum Daily Load
TMSP	Tennessee Multi-Sector General Permit for the Discharge of Stormwater from an Industrial Activity
TVA	Tennessee Valley Authority
TWQCA	Tennessee Water Quality Control Act
UIC	Underground Injection Control
USGS	United States Geological Survey

(End of body of policy.)

Policy 28

UTILITY ACCESS DRIVEWAYS

This policy specifies the requirements for the submittal of plans for utility access driveways. The plans shall be submitted in accordance with this policy.

Plans submitted require both a plan view and a profile and sometimes a grading plan is needed as well.

The plan view must show:

1. Stationing,
2. Radii of centerline horizontal curves,
3. Points of curvature and tangency of the horizontal curves,
4. Horizontal curves that tie the driveway to the roadway,
5. Width of the pavement,
6. Width of the easement, and
7. The turnaround area for fire apparatus

The minimum width of pavement permitted is sixteen (16) feet. However, the portion of the driveway in the right-of-way must be twenty (20) feet.

Turning templates are needed to show that the fire truck can make the necessary movements. The design vehicle is a BUS-40 as it is similar to the fire truck in that it has a forty (40) foot length and a twenty-five (25) foot wheelbase. The turning templates should be applied on a separate plan view. Dead end driveways in excess of one-hundred fifty (150) feet in length shall be provided with an approved area for turning around fire apparatus. For layouts and dimensions of the turnaround area, Appendix D of the International Fire Code (IFC) may be used as a guideline.

The profile must show:

1. Stations,
2. Grades,
3. Vertical curves,
4. Points of vertical intersection of the grades, and
5. No grade shall exceed 15%

The typical cross section of pavement to be provided meets the driveway requirements of what the City of Knoxville uses for business driveways on capital projects.

The section is as follows:

1. A compacted subgrade with four (4) inches of base (mineral aggregate type “A”, grade “D”)
2. One and three-fourth (1-3/4) inches binder (bituminous hot mix grade B-M), and
3. One and one-fourth (1-1/4) inches topping (asphaltic concrete surfacing grade “D”)

This cross-section provides seven (7) inches of material.

The need for a grading plan is decided on a case-by-case basis. The effects of stormwater runoff on the side slopes of the proposed access driveway may require curbs, culverts, catch basins or road side swales. Once again, the need for these items is decided on a case-by-case basis

If a utility wishes to collocate on an existing structure that does not have vehicular access, then access must be provided and will need to meet the conditions listed above.